Installation and Operating Manual

(Translation of the original installation and operating manual)

T…

Turbo Coupling with Constant Fill

including design as per Directive 2014/34/EU (ATEX directive)

Version 11 , 2017-07-10
3626-011000 en, Protection Class 0: public

Serial No. [1]		
Coupling type [2]		
Year of manufacture		
Mass (weight)		kg
Power transmission		kW
Input speed		rpm
Operating fluid	☐ mineral oil ☐ water ☐	
Filling volume		dm^3 (liters)
Number of screws z [3]		
Nominal response temperature of fusible plugs		°C
Connecting coupling type		
Sound pressure level $L_{PA,1m}$		dB
Installation position	☐ horizontal ☐ vertical	
Drive via	☐ outer wheel ☐ inner wheel	

1) Please indicate the serial number in any correspondence (→ Chapter 18).
2) T...: oil / TW...: water.
3) Determine and record the number of screws z (→ Chapter 10.1).

Please consult Voith Turbo in case that the data on the cover sheet are incomplete.

Contact

Voith Turbo GmbH & Co. KG
Division Industry
Voithstr. 1
74564 Crailsheim, GERMANY
Tel. + 49 7951 32 599
Fax + 49 7951 32 554
vtcr-ait.service@voith.com
www.voith.com/fluid-couplings

3626-011000 en

This document describes the state of design of the product at the time of the editorial deadline on 2017-07-10.

Installation and Operating Manual / Version 11 / 3626-011000
en / Protection Class 0: public / 2017-07-10

Contents

1	**Voith Turbo Coupling with Constant Fill**	**7**
1.1	**Function**	**7**
2	**Technical data**	**9**
3	**Declarations of Manufacturer**	**11**
3.1	**Declaration regarding assemblies and components**	**11**
3.2	**Declaration of conformity**	**12**
4	**User Information**	**13**
5	**Safety**	**15**
5.1	**Safety information**	**15**
5.1.1	Structure of safety information	15
5.1.2	Definition of safety symbols	16
5.2	**Intended use**	**16**
5.3	**Unintended use**	**17**
5.4	**Structural changes**	**17**
5.5	**General information as to dangerous situations**	**17**
5.6	**Remaining risks**	**22**
5.7	**What to do in case of accidents**	**22**
5.8	**Information with regard to operation**	**22**
5.9	**Qualification of staff**	**27**
5.10	**Product monitoring**	**27**
6	**Transport and Storage**	**28**
6.1	**As delivered condition**	**28**
6.2	**Scope of supply**	**28**
6.3	**Transport**	**29**
6.4	**Lifting**	**30**
6.5	**Storage / Packing / Preservation**	**35**
6.5.1	Storage of turbo coupling	35

6.5.2	Storage of flexible element	35
7	**Tightening torques**	**36**
7.1	**Set screws and fixing bolts**	**37**
7.2	**Fusible plugs, filler plugs, sight glasses, blind- and nozzle screws**	**37**
7.3	**Fastening screws**	**38**
8	**Installation and Alignment**	**39**
8.1	**Tools**	**39**
8.2	**Preparation**	**40**
8.2.1	Keys	41
8.3	**Mounting of basic type T turbo coupling**	**42**
8.3.1	Mounting	42
8.3.2	Mounting device	46
8.4	**Mounting of basic type TN turbo coupling**	**47**
8.4.1	Mounting	47
8.5	**Alignment**	**50**
8.5.1	Connecting coupling on the input side (outer wheel drive)	50
8.5.2	Connecting coupling on the output side (outer wheel drive)	52
8.5.3	Laid lengths and type allocations – turbo coupling / flexible connecting coupling	52
8.5.4	Displacement values	54
8.5.5	Alignment	55
9	**Operating fluids**	**61**
9.1	**Requirements to be fulfilled by the operating fluid ‘water’**	**62**
9.1.1	Usable operating fluids	62
9.1.2	Water used as operating fluid for turbo couplings with centrifugal valves (types TW…F…)	62
10	**Filling, Filling Check and Draining**	**65**
10.1	**Filling the turbo coupling**	**66**
10.1.1	How to fill turbo couplings installed in horizontal position, inclination < = 30°	66
10.1.2	How to fill turbo couplings installed in vertical position, inclination > 30°	68

10.2	**Level check**	**69**
10.2.1	Level check for turbo couplings installed in horizontal position	69
10.2.2	Level check for turbo couplings installed in vertical position	70
10.3	**Draining the turbo coupling**	**70**
10.3.1	Draining of turbo couplings without delay chamber installed in horizontal position	71
10.3.2	Draining of turbo couplings with delay chamber installed in horizontal position	71
10.3.3	How to drain turbo couplings installed in vertical position	72
11	**Commissioning**	**73**
12	**Operation**	**76**
13	**Maintenance, Servicing**	**77**
13.1	**Outside cleaning**	**80**
13.2	**Flexible connecting coupling**	**81**
13.2.1	Checking the flexible element for wear	81
13.2.2	Maintenance intervals	83
13.3	**Bearings**	**83**
13.3.1	Bearing lubrication when mineral oil is used as operating fluid	83
13.3.2	Bearing lubrication when water is used as operating fluid	83
13.3.3	Replacement of bearings / re-lubrication	84
13.4	**Fusible plugs**	**84**
14	**Assembly Check, Commissioning and Maintenance Report**	**87**
14.1	**Assembly check report**	**88**
14.2	**Commissioning report**	**90**
14.3	**Maintenance report for general maintenance**	**92**
14.3.1	Maintenance report for flexible connecting coupling	93
15	**Disassembly of Turbo Coupling**	**94**
15.1	**Preparation**	**94**
15.2	**Disassembly of basic type T turbo coupling**	**95**
15.2.1	Removal using the hydraulic removal device	97
15.2.2	Removal using the mechanical removal device	98
15.3	**Reassembly of basic type T turbo coupling**	**100**

15.4	**Disassembly of basic type TN turbo coupling**	**100**
15.5	**Reassembly of basic type TN turbo coupling**	**100**
16	**Disposal**	**101**
17	**Malfunctions – Remedial Actions**	**102**
18	**Queries, Orders Placed for Field Service Representative and Spare Parts**	**105**
19	**Temperature monitoring**	**106**
19.1	**MTS mechanical thermal switch unit for pre-warning**	**107**
19.2	**BTS non-contacting thermal switch unit**	**108**
19.2.1	BTS non-contacting thermal switch unit for pre-warning	108
19.2.2	BTS-Ex non-contacting thermal switch unit for limiting the maximum surface temperature	109
19.3	**BTM non-contacting thermal measuring device for prewarning**	**110**
20	**Spare parts information**	**111**
20.1	**Components overview - Voith turbo coupling 154 – 1150**	**113**
20.2	**Spare parts for Voith turbo coupling 154 – 274**	**114**
20.3	**Spare parts for Voith turbo coupling 366 – 1150**	**115**
20.4	**Spare parts for connecting coupling**	**117**
20.4.1	Connecting coupling on the input side	117
20.4.2	Connecting coupling on the output side	119
21	**Index**	**120**
22	**Annex**	**122**

1 Voith Turbo Coupling with Constant Fill

1.1 Function

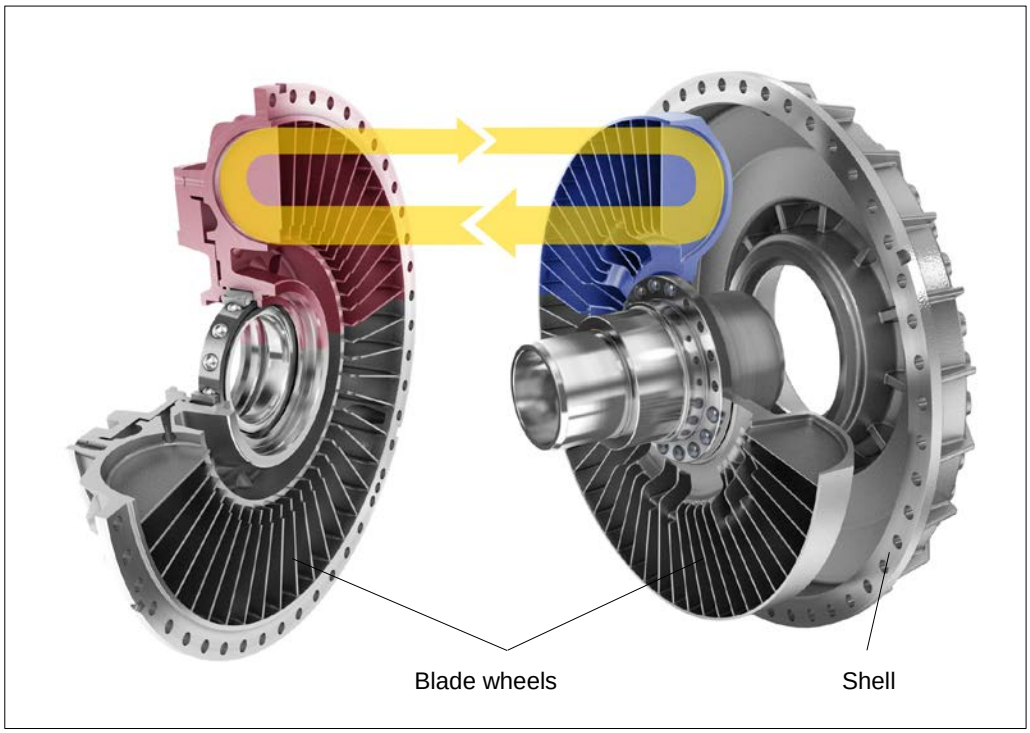

Fig. 1

The Voith turbo coupling is a hydrodynamic coupling working to the Föttinger principle. Its main elements consist of two blade wheels - the pump impeller and the turbine wheel - enclosed by a shell. Both wheels are provided with bearings relative to each other. The power is transmitted with hardly any wear, there is no mechanical contact between the power-transmitting parts. A constant amount of operating fluid is in the coupling.
The mechanical energy provided by the drive motor is converted into kinetic energy of the operating fluid in the connected pump impeller. In the turbine wheel, this kinetic energy is reconverted into mechanical energy.

Three conditions are to be considered with regard to the coupling function:

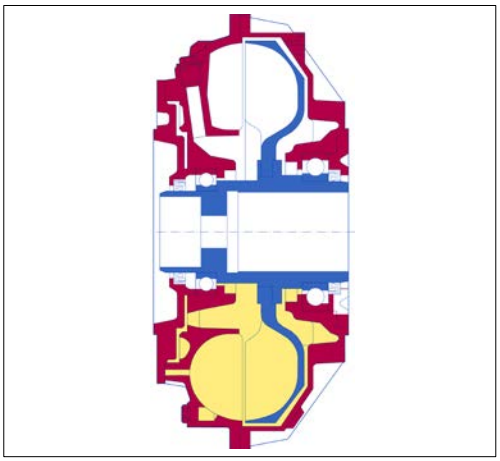

Fig. 2

Standstill
The whole operating fluid rests in the coupling.

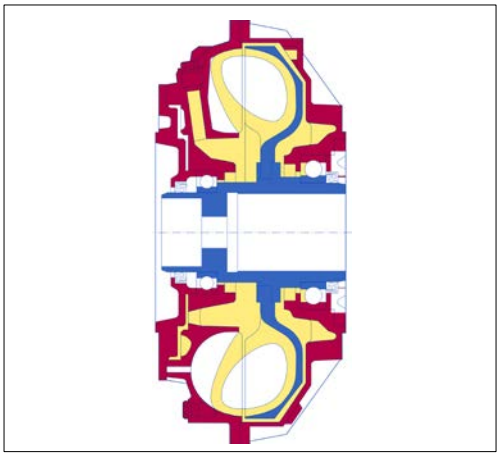

Fig. 3

Starting condition
The pump impeller accelerates the operating fluid with increasing motor speed causing a circulating flow in the working chamber. The whole blade space of the turbine wheel is flooded, and the turbine wheel starts to move as a result of the kinetic energy of the fluid flow. The coupling characteristic curve determines the torque curve during start-up.

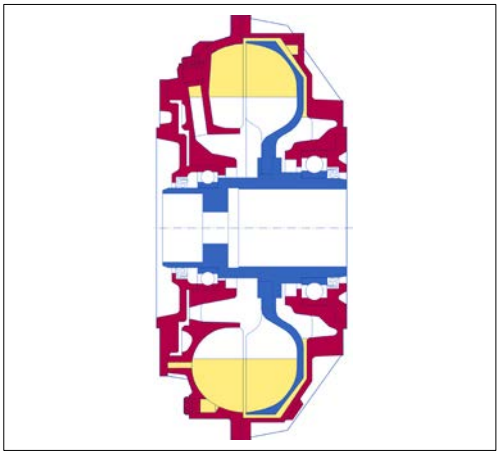

Fig. 4

Nominal operation
During nominal operation, only the torque required by the driven machine is transmitted. The low speed difference between pump impeller and turbine wheel (the so-called rated slip) results in a stationary flow condition in the coupling.

2 Technical data

Information required for use in potentially explosive atmospheres:

CE Ex marking:		
Ambient temperature, if deviating from -25 °C T_a 40 °C		°C
max. surface temperature (T3= 200 °C, T4= 135 °C, or deviating)		°C
Temperature monitoring	☐ MTS [1] for pre-warning	
	☐ BTS [2] for pre-warning	
	☐ BTS-Ex [2] for limitation of max. surface temperature for Voith turbo couplings acc. to ATEX directive. Maximum permissible temperature of turbo coupling when switching on the motor:	°C
Nominal response temperature of temperature monitoring		°C
Max. permissible filling volume [3]		dm^3 (liters)
Overload (à Chapter 5.8), causing the thermal fuse (fusible plug/s and/or BTS-Ex) to respond, requires the power supply to be switched off after		s (sec)
An additional monitoring of the output speed is required to switch off the power supply before the fusible plugs respond.	☐ Yes ☐ No	
After switching on the motor, monitoring of output speed has to begin after		s (sec)
Diameter of input [4]		mm
Diameter of output [4]		mm
Replacement of ball and roller bearings after		h

Table 1

1) MTS: Mechanical thermal switch unit (→ Chapter 19.1).
2) BTS: Non-contacting thermal switch unit (→ Chapter 19.2).
3) Applies if filling volume is not indicated on the cover sheet.
4) Diameter and fit of hub or shaft to be joined by means of shaft-hub connection.

Additional information/data required for use in potentially explosive atmospheres:

3 Declarations of Manufacturer

3.1 Declaration regarding assemblies and components

Since 29 December 2009, a new Machinery Directive 2006/42/EC has to be applied bindingly in the member states of the European Economic Area (EEA).

Voith turbo couplings of Product Group "Start-up Components", as defined by the new Machinery Directive 2006/42/EC and the explanations of the guidelines published in December 2009 to implement the Machinery Directive, are neither "machines" nor "incomplete machinery", but rather assemblies or components.

As our products are no incomplete machinery, we do not issue a declaration of incorporation as per Machinery Directive 2006/42/EC.

An EC Declaration of Conformity must not be issued for these products either, nor CE marking be provided, unless specified by other EC / EU directives or regulations.

Voith as certified company ensures that the basic safety and health requirements for their products are always be met by internal quality management systems and by applying harmonized standards.

The technical documentation for Voith products is so comprehensive that they may be installed reliably into machinery or incomplete machinery. Safe operation of the complete machinery with regard to Voith products is also ensured at a later date when observing this documentation.

3.2 Declaration of conformity

→ Annex (see EU Declaration of Conformity)

4 User Information

This manual will support you in using the turbo coupling with connecting coupling in a safe, proper and economical way.

If you observe the information contained in this manual, you will
- increase the reliability and lifetime of the turbo coupling and installation,
- avoid any risks
- reduce repairs and downtimes.

This manual must
- always to be available at the machine jobsite
- be read and used by every person who transports the turbo coupling, works on the turbo coupling or commissions the same.

The turbo coupling has been manufactured according to the latest design standard and approved safety regulations. Nevertheless, the user's or third party's life may be endangered or the machine or other property impaired in case of improper handling or unintended use.

Spare parts:
Spare parts must comply with the technical requirements stipulated by Voith. This is guaranteed when original spare parts are used.
Installation and/or use of non-original spare parts may negatively change the mechanical properties of the **Voith Turbo coupling** and thus have an adverse impact on the safety.
Voith is not liable for any damages resulting from the use of non-original spare parts.

Use only appropriate workshop equipment for maintenance. Professional maintenance and/or repair can only be guaranteed by the manufacturer or an authorized specialist workshop.

This manual has been issued with the utmost care. However, should you need any further information, please contact:

Voith Turbo GmbH & Co. KG
Division Industry
Voithstr. 1
74564 Crailsheim, GERMANY
Tel. +49 7951 32 599
Fax +49 7951 32 554
vtcr-ait.service@voith.com
www.voith.com/fluid-couplings

Voith Turbo reserves the right for modifications.

5 Safety

5.1 Safety information

Safety information indicating the descriptions and symbols as described in the following are used in the operating manual.

5.1.1 Structure of safety information

⚠ **DANGER WORD**
Hazard consequences Source of hazard • Warding off of danger

Danger word
The danger word divides the severity of the danger in several levels:

Danger word	Severity of danger
⚠ DANGER	Death or serious injury (irreversible personal injury)
⚠ WARNING	Death or serious injury possible
⚠ CAUTION	Minor or moderate injury possible
NOTICE	Possibly damage to property of - the product - its environment
SAFETY INFORMATION	General applications details, useful information, safe job procedure and proper safety measures

Table 2

Hazard consequences
Hazard consequences indicate the kind of hazard.

Source of hazard
The source of hazard indicates the cause of hazard.

Warding off of danger
Warding off of danger describes the measures to be taken to ward off a danger

5.1.2 Definition of safety symbols

Symbol	Definition
	Danger of explosion Marking with the Ex-symbol indicates possible hazards which have to be observed for the use in potentially explosive atmospheres.

Table 3

5.2 Intended use

The turbo coupling with constant fill is provided to transmit the torque from the drive motor to the driven machine.
The **power** permitted during stationary operation at a specific **input speed** and a specific **coupling filling** (operating fluid and filling) is entered on the cover sheet of this manual. Any use beyond that is deemed unintended (→ Chapter 5.3 Unintended use).
Intended use also includes observing this installation and operating manual and complying with the inspection and maintenance conditions.
The manufacturer is not liable for any damages resulting from unintended use. The risk has to be borne solely by the user.

SAFETY INFORMATION

- Observe the assembly plan belonging to the order.
- If not indicated accordingly in → Chapter 2, it is not allowed to use this turbo coupling in potentially explosive atmospheres!
- Please check with reference to the marking whether the turbo coupling is approved for use in potentially explosive atmospheres.
- If the zonal classification changes, the operator has to check whether it is still allowed to operate the turbo coupling in that zone.

A marking according to ATEX Directive has been provided on the periphery of the turbo couplings. The marking specifies in what potentially explosive atmospheres and under what conditions the use is permitted.

Example: CE Ex II 2D c 180 C X
Industrial area in which during normal operation an explosive atmosphere may form occasionally in form of a cloud of combustible dust in the air. Mechanical explosion protection by constructional safety. Maximum surface temperature: 180 °C.

5.3 Unintended use

The power transmission permitted during stationary operation at a specific input speed and a specific coupling filling (operating fluid and quantity) is entered on the cover sheet of this manual.
Any use beyond that described herein, e.g. for higher powers, higher speeds, other operating fluids or operating conditions that have not been agreed upon, is deemed unintended.
Moreover, it is not permitted to use BTS-Ex non-contacting thermal switch units from third parties.

5.4 Structural changes

WARNING

Risk of personal injuries and damage to property
Structural changes not done properly on the turbo coupling may cause personal injury and damage to property.

- Changes, attachments or conversions on the turbo coupling may only be performed upon approval by Voith Turbo GmbH & Co. KG, Crailsheim.

5.5 General information as to dangerous situations

For all work performed on the turbo coupling, please observe the local regulations for the prevention of accidents!

Hazards while working on the turbo coupling:

WARNING

Risk of injury
While working on the turbo coupling, there is the risk of injury through cutting, crushing, burns and cold burns in case of minus degrees.

- Never touch the turbo coupling without wearing protective gloves.
- Start to work on the turbo coupling only after it has cooled down.
- Ensure that there is sufficient light, a sufficiently large working space and good ventilation when working on the turbo coupling.
- Switch off the unit in which the turbo coupling is installed and secure the switch against inadvertent switch-on.
- For all work performed on the turbo coupling ensure that both the drive motor and the driven machine have stopped running and that a re-start is absolutely impossible!

Hot surfaces:

WARNING

Risk of burning
The turbo coupling gets warm during operation.
- Please provide a guard for protection against contact with the turbo coupling! However, ventilation of the turbo coupling must not be impaired.

NOTICE

Damage to property
Thermal distorsion or tensions if the warm turbo coupling is cooled down by means of fluids.
- Never use fluids to cool down the turbo coupling!
- Let the turbo coupling cool down at ambient temperature.

Rotating parts:

Protective cover
→ Chapter 11

WARNING

Entanglement hazard
Rotating parts, such as the turbo coupling itself and exposed shaft parts need to be protected by a protective cover against contact with and entry of loose parts.
- Never operate the turbo coupling without these protective covers.

Noise:

Sound pressure level
→ Cover sheet

WARNING

Hearing loss, permanent impairment of hearing
The turbo coupling generates noise during operation. If the A-classified equivalent sound pressure level $L_{PA,\ 1m}$ exceeds 80 dB(A), this may cause impairment of hearing!
- Wear ear protection.

Electric shock:

DANGER

Electric shock
On account of incorrectly mounted or incorrectly connected electrical components, and disconnected electric connections, persons could get an electric shock and be severely injured, possibly with fatal consequences.
Incorrectly mounted or incorrectly connected electrical components and disconnected electric connections may cause damages to the machine.

- A qualified electrician has to properly carry out the connection to the electric supply network considering the system voltage and the maximum power consumption.
- The system voltage has to be in conformity with the system voltage indicated on the nameplate.
- There has to be a corresponding electrical protection by a fuse on the network side!

DANGER

Electrostatic processes
Electrostatic charging may injure persons by an electric shock.

- Allow only a qualified electrician to install the equipment into which the turbo coupling is installed.
- Machine and electric installation are provided with grounding connections.

Overspeed:

NOTICE

Damage to property
Non-recognition of overspeed, wrong direction of rotation or parameters outside the tolerance due to incorrect programming, may destroy the turbo coupling.

- Check whether the entire system is equipped with a device which safely prevents overspeed (for example brake or backstop).
- For rated speed, → cover sheet.

This refers only to installations where overspeed (exceeding the rated speed) is possible.

Extreme ambient temperatures:

Ambient temperature → Chapter 2

WARNING

Risk of personal injuries and damage to property
Extreme ambient temperatures may result in thermal overload of the turbo coupling, thus causing the fusible plugs to melt and seriously injure any persons in their immediate surroundings, and to cause damage to the turbo coupling.

- Observe the permissible ambient temperature.

Only when water is used as operating fluid

NOTICE

Damage to property
The turbo coupling may be damaged by frozen operating fluid.

- The ambient temperature must be above the freezing point of the operating fluid.
- Adhere to the temperature limits indicated (→ Chapter 5.8).

Operating fluid which sprays off or leaks out:

WARNING

Risk of losing sight due to operating fluid spraying off, risk of burning
In case of thermal overload of the turbo coupling, the fusible plugs respond. Operating fluid leaks out through these fusible plugs.

- Persons close to the turbo coupling must wear safety goggles.
- Please make sure that the spraying-off operating fluid cannot get in contact with persons.
- If the fusible plugs spray off, switch off the drive immediately.
- Electrical devices located near the coupling need to be splash-guarded.

WARNING

Fire hazard

After the fusible plugs responded, spraying off oil may ignite on hot surfaces causing fire, as well as releasing toxic gases and vapor.

- Make sure that spraying off operating fluid cannot get into contact with hot machine parts, heaters, sparks or open flames.
- Immediately switch off the driving machine when the fusible plugs respond.
- Please pay attention to the information contained in the safety data sheets.

CAUTION

Danger of slipping

Slipping hazard due to spraying off solder of fusible plugs and leaking out operating fluid.

- Please provide a catch pan of sufficient size.
- Immediately remove any leaking out solder and operating fluid.
- Please pay attention to the information contained in the safety data sheets.

Checking the methane content before working on the turbo coupling:

WARNING

Explosion hazard

For turbo couplings with housings made of aluminum alloys and when the protective cover was removed, if the permissible methane content is exceeded, there is the risk of explosion.

- Before and during all work performed on the turbo coupling, check the methane content around the turbo coupling.
- Should this permissible limit value be exceeded, the work has to be stopped until the value is again below the limit value.

Permissible limit values according to local regulations

5.6 Remaining risks

WARNING

Risk of personal injuries and damage to property
Unintended use or incorrect operation may cause death, serious injuries or minor injuries as well as damage to property and the environment.

- Only persons who are sufficiently qualified, trained and authorized are allowed to work on or with the turbo coupling.
- Please observe the warnings and safety information.

5.7 What to do in case of accidents

SAFETY INFORMATION

- In case of accidents, please observe the local regulations, the operating manuals and the operator's safety measures.

5.8 Information with regard to operation

SAFETY INFORMATION

- If irregularities are found during operation, immediately switch off the drive unit.

Power transmission:

The cover sheet of this manual indicates the possible power transmission at a specific input speed and a specific coupling filling (operating fluid and quantity).
These values describe a permissible working point for the stationary operation of the turbo coupling.

NOTICE

Damage to property
Deviations from the permissible working point cause damage the turbo coupling.

- Voith Turbo's approval is required for a stationary operation of the turbo coupling at a different working point.

Operating fluid:

NOTICE

Damage to property
Too little filling results in thermal overload of the turbo coupling, and in case of too much filling, the turbo coupling may be damaged by internal pressure.

- Operate the turbo coupling only with the filling quantity stated on the cover sheet of this manual.
- Use only the operating fluid indicated on the cover sheet of this manual.

Heating up during start-up:

NOTICE

Damage to property
During start-up, the turbo coupling heats up more than during stationary operation due to the increased slip.

- Please provide sufficient intervals between start-ups to avoid thermal overload.

Starting characteristic of turbo couplings with delay chamber:

On start-up, the operating fluid flows from the delay chamber into the turbo coupling working chamber. On standstill, the operating fluid returns into the delay chamber. Please provide sufficient intervals (a few minutes) between the starts to get a correct starting characteristic.

Coupling temperature:

WARNING

Explosion hazard
Explosion hazard due to high temperature of turbo coupling.
- Make sure that the air surrounding the turbo coupling does not exceed the permissible value.

Technical data:
→ Chapter 2 and ordering documents

NOTICE

Damage to property
The turbo coupling may be damaged due to falling below the permissible ambient temperature.
- Please consult Voith Turbo if the turbo coupling shall be used
  - in case of risk of frost when water is used as operating fluid
  - at ambient temperatures below -25 °C when oil is used as operating fluid.

NOTICE

Damage to property
Overheating (nominal temperature is exceeded) may damage the turbo coupling.
- Provide sufficient ventilation / aeration of the turbo coupling.

Fusible plugs:

The fusible plugs protect the turbo coupling against damage due to thermal overload.

Technical Data
→ Chapter 2

NOTICE

Damage to property
The turbo coupling will be damaged if operation is continued after a fusible plug responded.
- Switch off the drive motor immediately on response of one of the fusible plugs!
- Use original fusible plugs only with the response temperature indicated on the → cover sheet of this operating manual.

Monitoring devices:

Monitoring devices:
→ Chapter 19

NOTICE

Damage to property
Damage to turbo coupling due to monitoring devices not ready for service.
- Check whether existing monitoring devices are in a state ready for service.
- Repair any defective monitoring device immediately.
- Never bypass safety devices.

Blocking:

NOTICE

Damage to property
Blocking of the driven machine may cause overheating of the turbo coupling and response of the fusible plugs thus endangering persons as well as the turbo coupling and environment.
- Immediately switch off the driving machine.

Overload of turbo coupling:

After the thermal fuse responded, switch off the power supply after the time required in → Chapter 2 at the latest.
In case of multi-motor drive, switch off the whole system!

If an additional monitoring of the overload is required, monitor the output speed.
If the output speed falls below the input speed by more than 10%, immediately switch off the power supply.

It is necessary to switch off the power supply as otherwise the permissible surface temperature indicated cannot be met.

Permissible surface temperature:
→ Chapter 2

NOTICE

Overload of turbo coupling
The turbo coupling will be overloaded in cases where
- the driven machine blocks
- the driven machine is loaded excessively during nominal operation and/or during start-up.

Please consult Voith Turbo in case of unforeseeable turbo coupling overload.

Connecting couplings
→ Chapter 20.4

Connecting couplings:

Connecting couplings of types EPK, ERK:

NOTICE

Damage to property
Fracture (shearing) of flexible element.
- Immediately stop the drive.
- In case of multi-motor drive, switch off the whole system.
- Regularly check the flexible element for wear.

Connecting couplings of types ENK, EEK, Nor-Mex G:

WARNING

Risk of personal injuries and damage to property
In case of too heavily worn flexible element, there is the risk that parts of the connecting coupling touch/hit each other. Fire and explosion hazard due to sparking! Danger to life due to flying debris! Risk of damage to the driving and driven machine!
- Regularly check the flexible element and rollers for wear.

5.9 Qualification of staff

Only qualified and authorized professional staff are allowed to perform work, such as transportation, storage, installation, electrical connection, commissioning, operation, maintenance, servicing and repair.

Qualified professional staff in the sense of this installation and operating manual are persons who are familiar with transportation, storage, installation, electrical connection, commissioning, maintenance, service and repair, and who have the necessary qualifications for their job. Qualification has to be ensured by performing training and giving instructions on the turbo coupling.

This staff must be trained, instructed and authorized to:

- operate and service machines in a professional manner in accordance with the technical safety standards.
- use lifting appliances, slings (ropes, chains, etc.) and lifting points in a professional manner.
- properly dispose of media and their components, e.g. lubricating grease.
- service and use safety devices in a manner that ensures compliance with safety standards.
- prevent accidents and provide first aid.

Staff to be trained may only perform work on the turbo coupling under the supervision of a qualified and authorized person.

The staff in charge of any work to be done on the coupling must

- be reliable,
- have the legal age,
- be trained, instructed and authorized with regard to the intended work.

5.10 Product monitoring

We are under legal obligation to keep the performance of our products under observation, even after shipment.
Therefore, please inform us about anything that might be of interest to us. For example:

- Change in operating data,
- experience gained with the machine,
- recurring problems,
- problems experienced with this installation and operating manual.

Our address:
→ Page 2

6 Transport and Storage

6.1 As delivered condition

Packing
→ Chapter 6.5

- The turbo coupling will be supplied in ready-mounted condition.
- The turbo coupling will not be filled. If the scope of supply includes the operating fluid, it will be delivered in a separate container.
- Other accessories will be supplied as loose parts.

Basic type T…:
The turbo coupling will be supplied completely, with mounted connecting coupling (if included in the scope of supply). Fixing bolt and holding disk will be supplied in addition.

Basic type T…N…:
The turbo coupling will be supplied completely with mounted primary coupling flange.

6.2 Scope of supply

The turbo coupling will be supplied as indicated on the cover sheet.

Additional parts belonging to the scope of supply, such as connecting coupling, fusible plugs, temperature monitoring, mounting and removal device, etc. will be stated in the order confirmation.

6.3 Transport

WARNING

Explosion hazard
For turbo couplings with housings made of aluminum alloys, there can be the risk of explosion when being transported in / through explosive atmospheres.

- In potentially explosive atmospheres it is only allowed to transport the turbo coupling in suitable packing.
- This transport packing has to meet the same minimum requirements as the protective cover.

Protective cover
→ Chapter 11

WARNING

Risk of injury
Falling parts may seriously injure or kill you.

- Secure the turbo coupling sufficiently.
- Pay attention to the center of gravity position.
- Use the provided lifting points.
- Use appropriate transportation means and slings (ropes, chains, etc.).

WARNING

Risk of crushing
Incorrect handling of the turbo coupling may cause bruising of upper and lower limbs and seriously injure persons.

- Skilled staff only is allowed to carry out transportation!

6.4 Lifting

Lifting appliances, load carrying attachments, lifting points

Weight of turbo coupling: → cover sheet. Weights of over 100 kg will be stamped on the turbo coupling.

Observe the turbo coupling weight!

Lifting appliances (e.g. crane, high-lift truck), slings (ropes, chains, etc.) and lifting points (swivels, thread size as for items 1830 or 0780 → Chapter 7.3) need to be

- checked and approved,
- sufficiently dimensioned and in sound condition,
- and may only be operated by authorized and trained persons.

It is not allowed to use eyebolts!

Read the operating instructions for lifting appliances, slings (ropes, chains, etc.) and lifting points!

WARNING

Risk of injury
Damaged load carrying attachments or those with insufficient carrying capacity may break under load, with the consequence of serious or even fatal injuries!

- Check the lifting appliances and load carrying attachments for
  - sufficient carrying capacity (for weight, → cover sheet).
  - sound condition.

Fixing the turbo coupling

WARNING

Risk of injury
Falling parts may seriously injure or kill you.

- Do not walk under suspended loads.

NOTICE

Personal injury and damage to property
Improper fixing and lifting of the turbo coupling may cause personal injury and damage to property

- It is only allowed to lift the turbo coupling at the lifting points provided for this purpose (see the following pictures).
- When fastening and lifting the turbo coupling, do not damage the ribbing of the turbo coupling through lifting appliances or load carrying attachments.
- Damaged ribs may result in unbalance of the turbo coupling, thus causing uneven running of the machine.

- If a connecting coupling is fixed, remove it to allow the screwing in of swivels.
- Screw suitable swivels (thread size as for items 1830 and 0780 → Chapter 7.3) into the turbo coupling.
  Do not unscrew existing screws for this purpose; please use the threads provided.
- Fix the slings (ropes, chains, etc.).

Fig. 5

WARNING

Risk of injury

Danger to life and risk of injury caused by falling load, tilting or sliding of the turbo coupling.

- Slings (ropes, chains, etc.) must not be slung around the turbo coupling for lifting.
- Always use at least 2 slings (ropes, chains, etc.) for fixing.
- Do not walk under suspended loads.
- Observe the general guidelines for the prevention of accidents.
- Secure the turbo coupling against tilting and sliding as long as it is not mounted between the driving and driven machine.

Turning the turbo coupling

- Screw suitable swivels (thread size as for items 1830 and 0780 → Chapter 7.3) into the turbo coupling.
  Do not unscrew existing screws for this purpose; please use the threads provided.
- Fix the slings (ropes, chains, etc.).

Fig. 6

WARNING

Risk of crushing

Incorrect handling of the turbo coupling may cause bruising of upper and lower limbs and seriously injure persons.

- Always use at least 2 slings (ropes, chains, etc.) for fixing.
- For turning, please use 2 slings (ropes, chains, etc.) on each side.

- On the opposite side, screw suitable swivels (thread size as for items 1830 and 0780 → Chapter 7.3) into the turbo coupling.
  Do not unscrew existing screws for this purpose; please use the threads provided.
- Fix the turbo coupling to the second slings.

Fig. 7

- Align the turbo coupling horizontally using the two lifting appliances.

Fig. 8

- Carefully set the turbo coupling down on a wooden board / pallet, and secure it against tilting.
  The turbo coupling has been turned.

6.5 Storage / Packing / Preservation

6.5.1 Storage of turbo coupling

→ Annex (see the preservation and packaging instructions)

Disposal of the packaging
Dispose of packaging material according to the local regulations.

Notes on disposal
→ Chapter 16

NOTICE

Damage to property
Risk of frost
- In case of risk of frost, it is mandatory to drain the water of "TW" type turbo couplings.
- Remove the flexible element (item 1820) prior to cleaning the coupling components and applying the long-term preservation!

6.5.2 Storage of flexible element

Explosion protection!
The storage period of the flexible element (item 1820) until it is used in the connecting coupling must not exceed **4 years.**
- The storage area has to be dry and free from dust.
- Do not store the flexible element (item 1820) together with chemicals, solvents, fuels, acids, etc.
- They need to be protected against light with a high content of UV rays.

7 Tightening torques

NOTICE

Damage to property

The turbo coupling may be damaged by incorrectly tightened screws.

- Tighten all screws using a torque-adjustable torque wrench!

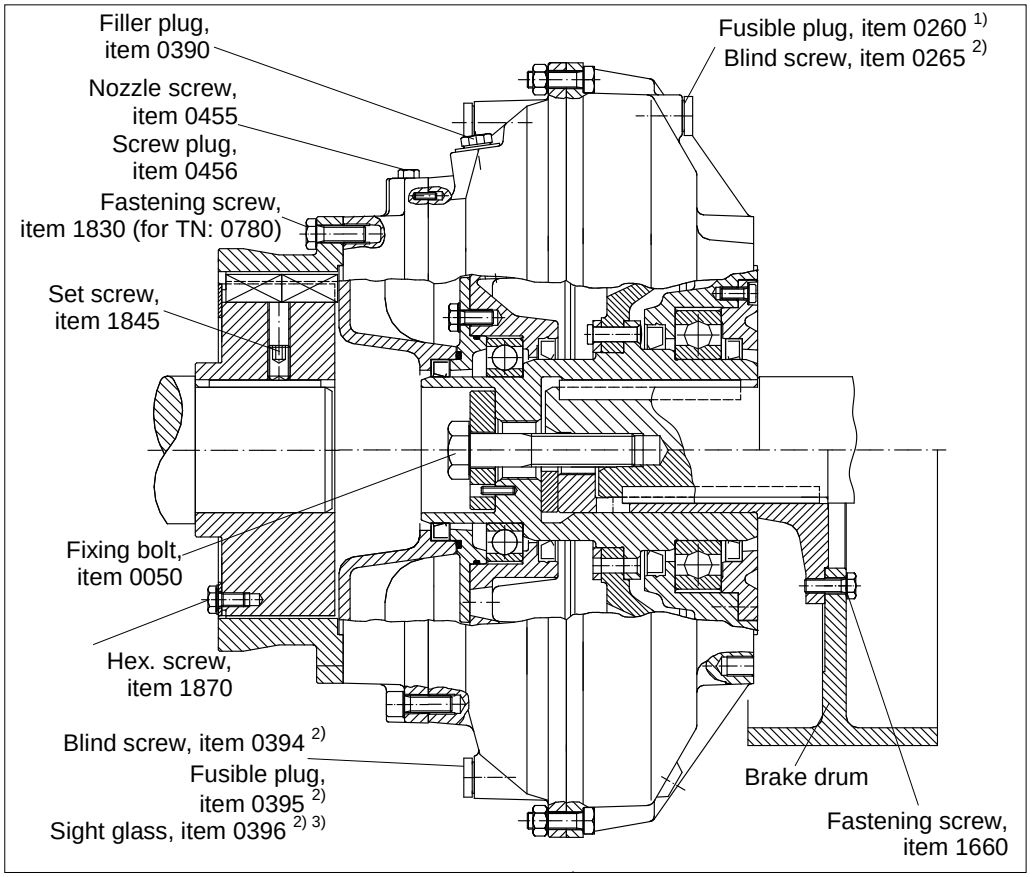

Fig. 9

1) Special design
2) For arrangement and quantity → Chapter 22 and/or assembly plan
3) From coupling size 366.

7.1 Set screws and fixing bolts

	Tightening torque in Nm									
Thread	**M6**	**M8**	**M10**	**M12**	**M16**	**M20**	**M24**	**M30**	**M36**	**M42**
Set screw, item 1845	4	8	15	25	70	130	-	-	-	-
Fixing bolt, item 0050	-	23	46	80	195	380	660	1350	2350	3750

Table 4

The tightening torques for fixing bolts apply to screws with property class 8.8 or higher, oil-moistened and relevant shaft journal material.

7.2 Fusible plugs, filler plugs, sight glasses, blind- and nozzle screws

	Tightening torque in Nm (dimension of thread)				
Coupling size	**Fusible plug, item 0260 [1] item 0395**	**Filler plug, item 0390**	**Blind screw, item 0265, item 0394**	**Sight glass, item 0396**	**Nozzle screw, item 0455, Screw plug item 0456**
154	8 (M8)	13 (M10)	8 (M8)	-	-
206	13 (M10)	20 (M12x1.5)	13 (M10)	-	-
274	13 (M10)	30 (M14x1.5)	13 (M10)	-	-
366 to 650	50 (M18x1.5)	80 (M24x1.5)	50 (M18x1.5)	50 (M18x1.5)	48 (M16x1.5)
750 to 1150	144 (M24x1.5)	235 (M36x1.5)	144 (M24x1.5)	144 (M24x1.5)	48 (M16x1.5)

Table 5

1) Special design

7.3 Fastening screws

	Tightening torque in Nm (dimension of thread)			
Coupling size	**Hex. screw, item 0780, item 1830**	**Hex. screw, item 1660**	**Socket head screw, Nor-Mex G, item 1816 [2)]**	**Hex. screw, EPK, item 1870**
154	9 (M6)	-	-	-
206	23 (M8)	-	-	-
274	68 (M12)	80 (M12)	-	-
366	68 (M12)	80 (M12)	49 (M10)	23 (M8)
422	68 (M12)	80 (M12)	49 (M10)	46 (M10)
487	68 (M12)	80 (M12)	49 (M10)	46 (M10)
562	68 (M12)	195 (M16)	125 [1)] (M12)	46 (M10)
650	135 (M16)	380 (M20)	200 [1)] (M14)	46 (M10)
750	135 (M16)	380 (M20)	200 [1)] (M14)	46 (M10)
866	250 (M20)	380 (M20)	-	80 (M12)
1000	250 (M20)	-	-	80 (M12)
1150	580 (M27)	-	-	80 (M12)

Table 6

Screws with property class 8.8 or higher are used.

1) Screws with property class 10.9 are required.
2) → Chapter 20.4.2

8 Installation and Alignment

WARNING

Risk of injury
Please observe, in particular, → Chapter 5 (Safety) when working on the turbo coupling!

8.1 Tools

WARNING

Explosion hazard
There is the risk of explosion when using unsuitable tools.
- When using or assembling an Ex-coupling, use only tools approved for application in potentially explosive atmospheres.
- Observe the locally applicable regulations.
- Avoid formation of sparks.

The following tools are required; check in detail with the assembly plan.

Dimension of thread
→ Chapter 7

Tools:
Set of open-end wrenches
Set of ring spanners
Socket wrench box (containing hexagon spanners, ratchet, etc.)
Set of Allan keys
Screwdrivers
Torque wrenches
Hammer, rubber mallet
Set of files
Wire brush

Dial gauges
→ Chapter 8.5.5

Measuring equipment:
Dial gauge with holder
Caliper gauge
External screw-type micrometer according to shaft diameter
Inside micrometer according to hub diameter

Mounting auxiliaries:
Auxiliaries for alignment of motor and gearbox (fastening screws), e.g. shims for motor and gearbox feet (0.1 - 0.3 - 0.5 - 1.0 - 3.0 mm).
Grinding cloth, graining 100, 240.

Lifting appliances and load carrying attachments:

Swivel sizes → Chapter 7.3, items 1830 and 0780

Crane.
Two shackles with appropriate slings (ropes, chains, etc.) for lifting the coupling.
Observe the pictures → 8.3.1!
Adjustable chains or ropes with sufficient tensile strength (see individual weights).

8.2 Preparation

Weight of turbo coupling → cover sheet. Weights of more than 100 kg are stamped on the turbo coupling.

- Prepare suitable tools and lifting appliances.
- Observe the turbo coupling weight.
- Check the shaft journals of drive motor and driven machine for true radial running.
- Check the length of fixing bolt if the length of the shaft journal, on which the turbo coupling is mounted, was changed or not indicated to Voith Turbo.
- Clean fitting surfaces on shaft journals and hubs using emery cloth.
- Degrease flanges which will be bolted.
- Clean all preserved surfaces.
- Slightly oil the threads of bolts.

NOTICE

Damage to property
Overheating may damage the connecting coupling.
- Shafts that are connected to the turbo coupling by means of a flexible connecting coupling, must not exceed a temperature of 80 °C during operation.

- Apply a thin film of lubricant to the shaft journals.

SAFETY INFORMATION

Use a lubricant with the following characteristics:
- Operating temperature range: -20 °C…180 °C
- Water- and wash-out-resistant
- Protection against fretting corrosion and corrosion

Proposed lubricants:

Producer	Designation	Note
Dow Corning	Molykote G-N Plus Paste Molykote G-Rapid Plus Paste Molykote TP 42	
Fuchs	Gleitmo 815	
Liqui Moly	LM 48 Montagepaste	
Dow Corning	Molykote D 321 R Anti-Friction Coating	**Hazardous substance!** Observe the data sheet for hazardous substances!
Castrol Optimol	Molub-Alloy Paste White T Molub-Alloy Paste MP 3	

Table 7

8.2.1 Keys

Requirement

Keys must
- have sufficient back clearance,
- be axially fixed and
- move easily in the grooves.

Marking

When using a shaft-hub connection with key, the hub is marked with the key convention at the face side
- H: Half-key convention,
- F: Full-key convention.

This mark should comply with the mark on the shaft.

Inserting keys

SAFETY INFORMATION

Remove the key to avoid an unbalance in case of a shaft-hub connection with:
- one key
- balancing according to half-key convention
- and if the key is longer than the hub.

- For coupling hubs of sizes 154, 206 and 274 with a key or half-key convention, a compensation groove can be provided opposite for balancing of unbalance.

- For coupling hubs with a key and full-key convention, an identical compensation groove is provided opposite for balancing of unbalance.

- Clean the keyway.
- Insert the key straight into the keyway.
- Do not cant the key.
- If necessary, secure the inserted key against falling out.

8.3 Mounting of basic type T turbo coupling

Outer wheel drive:
The turbo coupling is mounted on the driven machine shaft, and then coupled with the drive motor through a flexible connecting coupling.

Inner wheel drive (special case):
The turbo coupling is mounted on the drive motor shaft, and then coupled with the driven machine shaft through a flexible connecting coupling.

8.3.1 Mounting

Qualification
→ Chapter 5.9

WARNING

Risk of crushing, injuries by cuts
During mounting and assembly, manual turning and positioning the turbo coupling, persons could bruise fingers or cut themselves on sharp edges thus getting seriously injured!
- Sufficiently qualified, instructed and authorized persons only are allowed to mount the turbo coupling!
- Proceed carefully.

NOTICE

Damage to property
The use of unsuitable working means or methods may cause damage to property.

- Only use tools suitable for mounting:
  - Mounting and removal device (from coupling size 274) available as accessory (→ Chapter 8.3.2)
- For mounting, **do not** use:
  - hammers
  - welding torches
  - pressure plates

SAFETY INFORMATION

Record the mounting process
For use in areas with potentially explosive atmosphere, it is mandatory to record the mounting process of the turbo coupling.
We recommend recording the process also for all other applications.

- For required records, → Chapter 14.

For operating fluid 'water' only

For turbo couplings using water as operating fluid, the hub bore is provided with a solid film lubricant. The lubricant must not be removed!

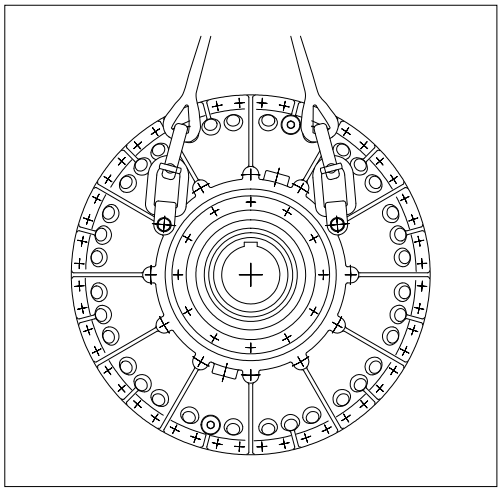

Fig. 10

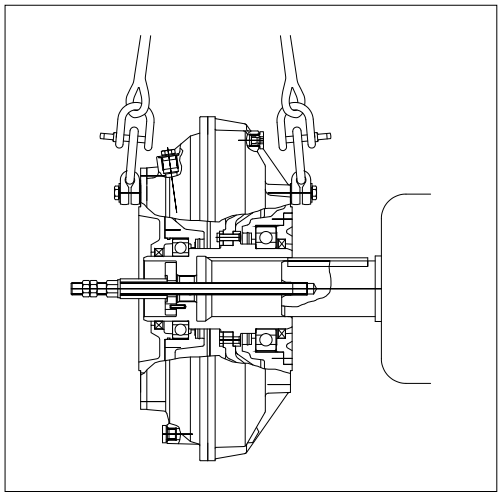

Fig. 11

- Fix the turbo coupling to a suitable lifting appliance.

WARNING

Risk of burning
The surface is hot due to getting warm.
- Do not touch the hub.

- Warm up carefully the hub to approx. 80 °C (facilitates mounting).
- Mount the turbo coupling on the relevant shaft journal.
- Insert the supplied holding disk:
  - For couplings **up to size 274** remove the circlip (item 0046) before inserting the holding disk, and then re-insert it.
  - For couplings **from size 366**, secure the holding disk against twisting by means of a roll pin (item 0070).
- Depending on the design of the shaft, ensure that the coupling hub is in contact with the shaft collar or the end face of shaft journal.

Coupling sizes 154 and 206:
- Insert a suitable and slightly oiled threaded rod in the shaft of the relevant machine.
- Mount the coupling on the shaft journal using a nut and a spacer tube.

Coupling size 274 to 1150:

Mounting device
→ Chapter 8.3.2

- Slightly oil the mounting spindle.
- Mount the coupling on the shaft journal using the mounting spindle, the spacer tube and the holding disk.

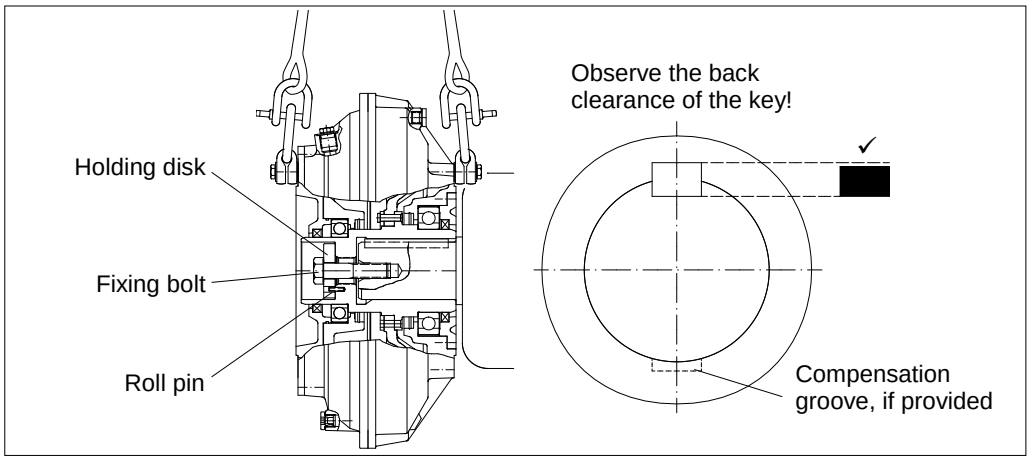

Fig. 12

Tightening torque
→ Chapter 7.1

- Check the holding disk for proper seat.
- Tighten the fixing bolt to the specified tightening torque.

NOTICE

Damage to property
The flexible connecting coupling hub has to be secured axially!
- Usually this is achieved by means of a set screw pressing on the key.
- Axial butting to a shaft collar and securing by means of a holding disk and fixing bolt are also possible.
- Provide a spacer ring between hub and shaft collar, if necessary.

- Fix the flexible connecting coupling hub to a suitable lifting appliance.

WARNING

Risk of burning
The surface is hot due to getting warm.
- Do not touch the hub.

- Carefully warm up the flexible connecting coupling hub to approx. 80 °C (facilitates the mounting).
- Mount the flexible connecting coupling hub on the relevant shaft journal.
- Tighten the set screw in the connecting coupling hub, if necessary.
- Insert the flexible element into the connecting coupling hub. Observe the correct number and proper seat of the flexible element in the connecting coupling!
- Move the flexible connecting coupling hub with the relevant machine next to the turbo coupling.
- Fix the machine slightly.
- Align the drive.
- If the turbo coupling is connected with a flexible pad coupling of type EPK, check that the sheet-metal holder (item 1860) and the ring (item 1810) do not touch.

Alignment
→ Chapter 8.5

8.3.2 Mounting device

Mounting device for the basic type T turbo coupling is available at Voith Turbo.

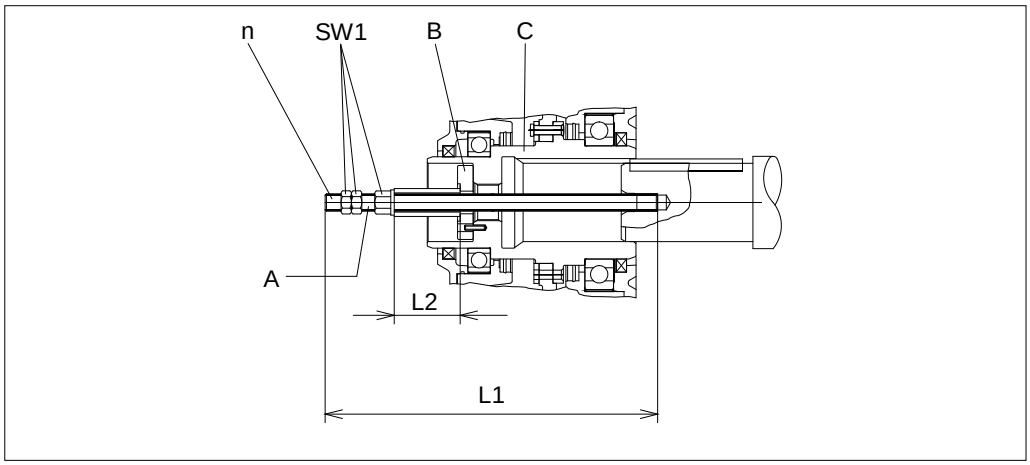

Fig. 13

A:	Mounting spindle	L1:	Total length
B:	Original holding disk	L2:	Length of spacer tube
C:	Coupling hub	n:	Dimension of mounting spindle thread
		SW1:	Width across flats

Coupling size	L1 in mm	L2 in mm	n	SW1 in mm	Article No. of mounting spindle	Article No. of spacer tube
274	520	135	M10 M12 M16 M20	17 19 24 30	TCR.10659840 TCR.10659850 TCR.10659860 TCR.10659870	TCR.10659880 TCR.10659890 TCR.10659900 TCR.10659910
366, 422	520	190	M10 M12 M16 M20	17 19 24 30	TCR.10659840 TCR.10659850 TCR.10659860 TCR.10659870	TCR.11110660 TCR.11110670 TCR.11054200 TCR.11054210
487, 562, 650, 750	780	245	M16 M20 M24 M30	24 30 36 46	TCR.11110620 TCR.10457720 TCR.10457730 TCR.10457740	TCR.11110680 TCR.10457860 TCR.10457870 TCR.10457880
866, 1000, 1150	1150	480	M20 M24 M30 M36 M42	30 36 46 55 65	TCR.11110630 TCR.11110640 TCR.11071880 TCR.11110650 TCR.11071890	TCR.11110690 TCR.11110700 TCR.11072020 TCR.11110710 TCR.11072030

Table 8

8.4 Mounting of basic type TN turbo coupling

Outer wheel drive:
The primary coupling flange is mounted on the motor shaft. Then the turbo coupling is connected with the primary coupling flange and coupled to the driven machine shaft through a flexible connecting coupling.

8.4.1 Mounting

Qualification
→ Chapter 5.9

⚠ WARNING

Risk of crushing, injuries by cuts
During mounting and assembly, manual turning and positioning the turbo coupling, persons could bruise fingers or cut themselves on sharp edges thus getting seriously injured!
- Sufficiently qualified, instructed and authorized persons only are allowed to mount the turbo coupling!
- Proceed carefully.

NOTICE

Damage to property
The use of unsuitable working means or methods may cause damage to property.
- Use only tools which are suitable for mounting.
- For mounting, **do not** use:
  - hammers
  - welding torches
  - pressure plates

SAFETY INFORMATION

Record the mounting process
For use in areas with potentially explosive atmosphere, it is mandatory to record the mounting process of the turbo coupling.
We recommend recording the process also for all other applications.
- For required records, → Chapter 14.

- Have the tools at hand, → Chapter 8.1.
- Make preparations, → Chapter 8.2.

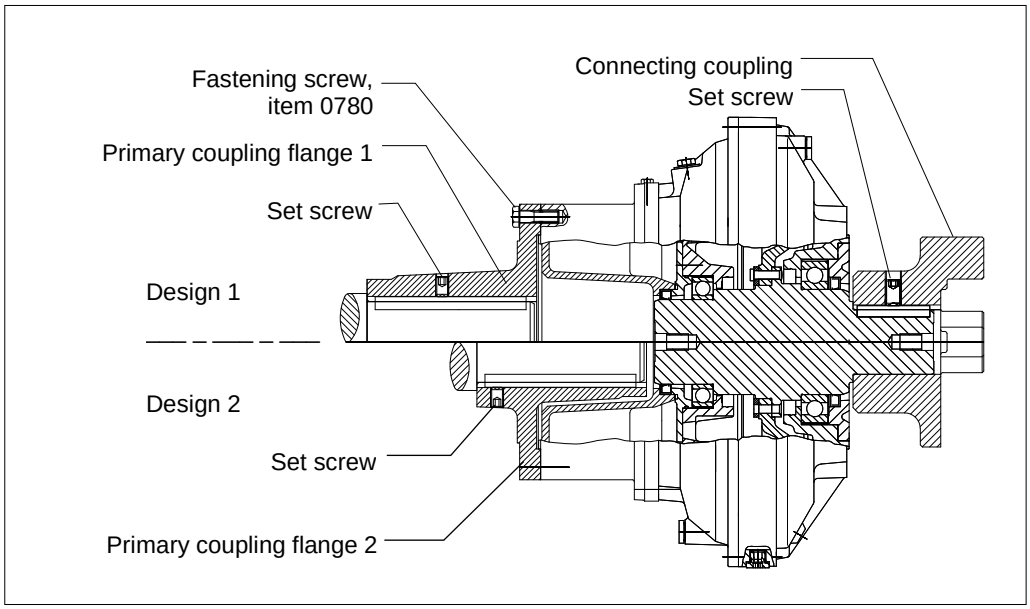

Fig. 14

WARNING

Risk of burning
The surface is hot due to getting warm.
- Do not touch the primary coupling flange.

- Warm up carefully the primary coupling flange to approx. 80 °C (facilitates mounting).
- Mount the primary coupling flange on the motor shaft and secure it with the relevant set screw in axial direction.
- Position the turbo coupling in front of the primary coupling flange.
- In the event of **complete balancing**, balancing marks (e.g. 0/0, 1/1, 2/2 etc.) are provided at the outer periphery of turbo coupling and the primary coupling flange. **Ensure that the balancing marks match!**

NOTICE

Damage to property
In case of improper centering it may be damaged.
- Prior to tightening the bolts (item 0780), push the external spigot of turbo coupling manually into the internal spigot of the primary coupling flange.
- Tighten the bolts (item 0780) when the two flange surfaces touch each other without any gap.

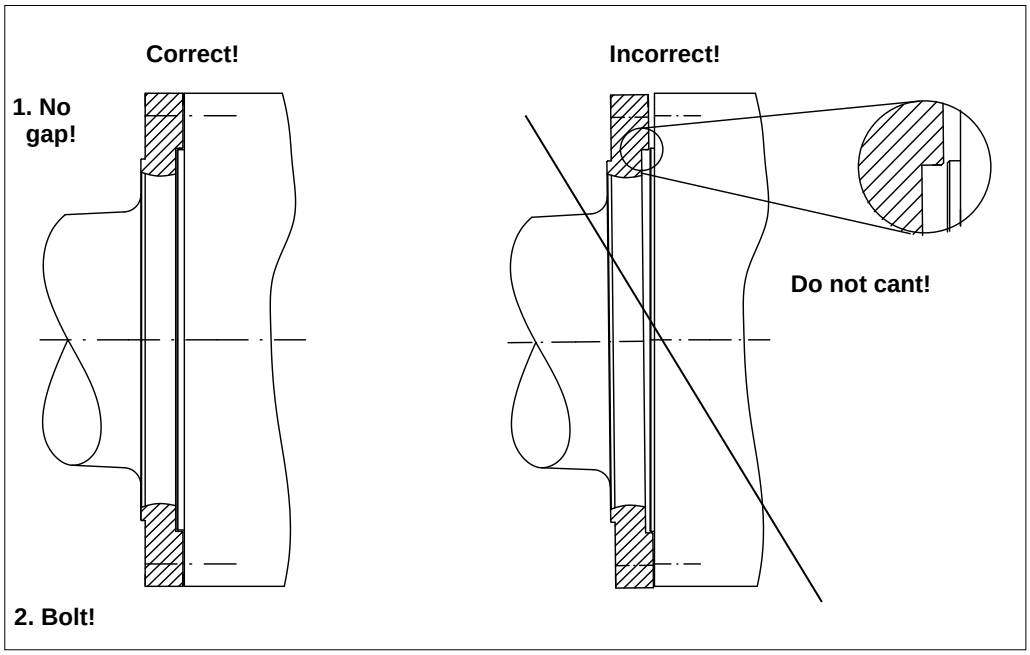

Fig. 15

- Fix the turbo coupling to the primary coupling flange using the relevant bolts (item 0780).

Tightening torque
→ Chapter 7.3

WARNING

Risk of burning
The surface is hot due to getting warm.
- Do not touch the connecting coupling hub.

- Carefully warm up the output side connecting coupling hub to approx. 80 °C (facilitates the mounting).
- Mount the connecting coupling hub on the driven machine.
- Tighten the set screw in the connecting coupling hub.
- Insert the flexible element into the connecting coupling hub.

NOTICE

Personal injury and damage to property
Improper fixing and lifting of the mounted unit may cause personal injury and damage to property.
- Fix the slings (ropes, chains, etc.) to the drive motor only!

- Move the mounted drive motor / turbo coupling unit to the driven machine and slightly bolt the drive motor.
- Align the drive.

Alignment
→ Chapter 8.5

8.5 Alignment

WARNING

Explosion hazard
In case of non-adherence to the conditions for explosion protection, there is the risk of explosion.

- The connecting couplings supplied by Voith meet the requirements for the use in potentially explosive atmospheres.
- If connecting couplings are used which are not included in Voith's scope of supply, an explosion-protection approval is required, otherwise there is a risk of explosion!

Flexible connecting couplings

- A flexible connecting coupling couples the turbo coupling with a shaft journal.
- After the alignment, deviations of position remain between turbo coupling and shaft journal. The flexible connecting coupling absorbs these deviations of position.

8.5.1 Connecting coupling on the input side (outer wheel drive)

The following connecting couplings are available at Voith Turbo for basic type T turbo couplings:

Flexible roller coupling
Type ERK:

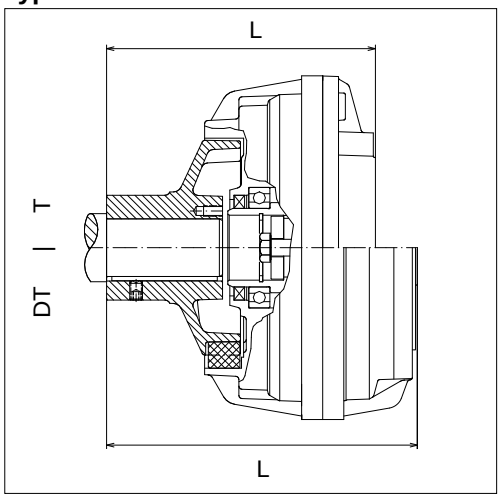

Fig. 16

Flexible pad coupling
Type EPK:

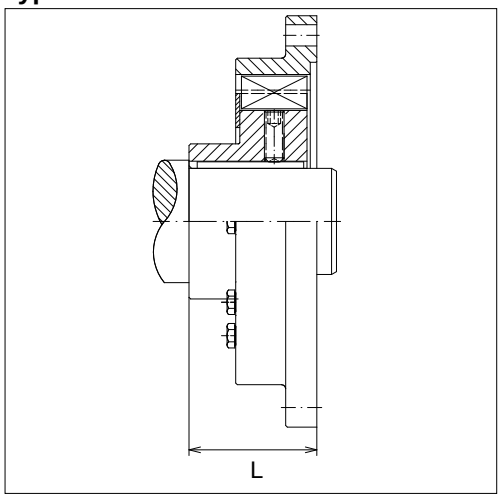

Fig. 17

Flexible element coupling
Type EEK-M:

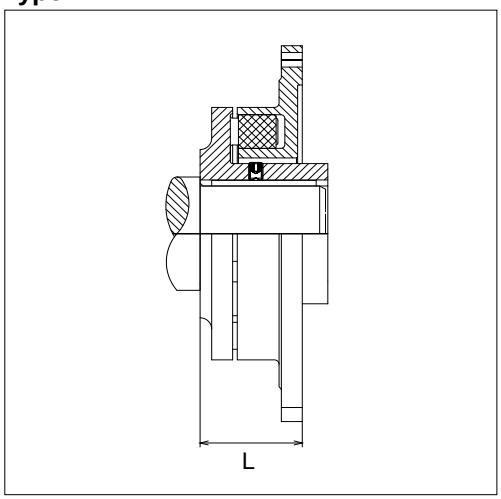

Fig. 18

Flexible element coupling
Type EEK-E:

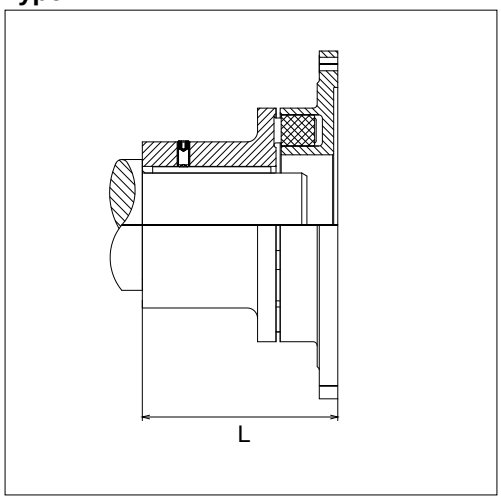

Fig. 19

Flexible cam coupling
Type ENK-SX:

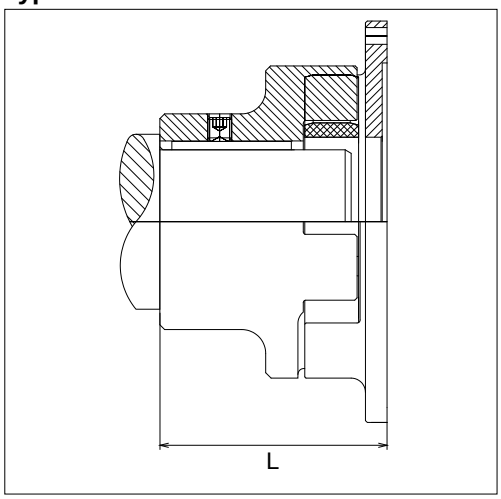

Fig. 20

Flexible cam coupling
Type ENK-SV:

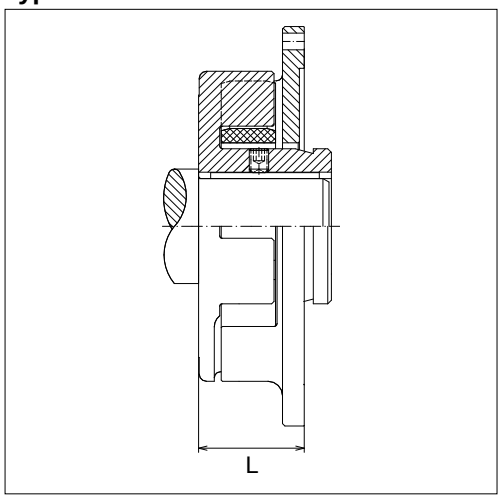

Fig. 21

8.5.2 Connecting coupling on the output side (outer wheel drive)

Connecting coupling available at Voith Turbo for basic type TN turbo couplings:

Flexible connecting coupling
Type Nor-Mex G:

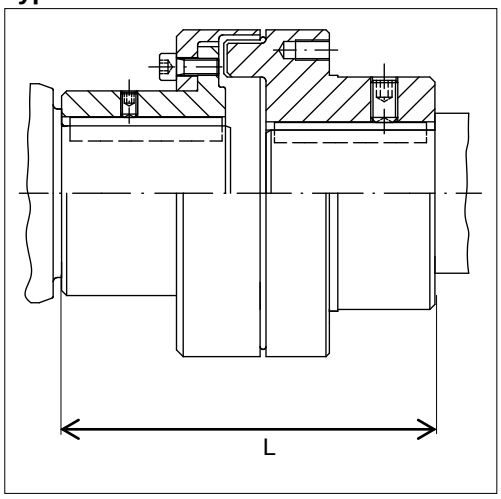

Fig. 22

8.5.3 Laid lengths and type allocations - turbo coupling / flexible connecting coupling

NOTICE

Damage to property
Axial constraining forces.
- Pay attention and adhere to laid lengths.
- In particular, pay attention to any displacements due to changes in temperature.

WARNING

Explosion hazard
Explosion hazard due to damage to the material caused by excessive misalignments.
- If shaft ends axially protrude the connecting coupling hub, measure the dimensions to make sure that a distance of **6 mm** to the turbo coupling is kept.

Laid lengths L for flexible connecting couplings, as shown in Chapters 8.5.1 or 8.5.2:

	Laid lengths L in mm						
Coupling size and type	**ERK with coupling**	**EPK**	**EEK-E**	**EEK-M**	**ENK-SX**	**ENK-SV**	**Nor-Mex G**
154 T…	143 + 1	-	-	-	-	-	-
154 DT…	165 + 1	-	-	-	-	-	-
206 T…	183 + 1	-	-	-	-	-	-
206 DT…	223 + 1	-	-	-	110.5 ± 1.5	56.5 ± 1.5	-
274 T…	255 + 1	78 ± 1	-	-	158.5 ± 2	67 ± 2	-
274 DT…	295 + 1	78 ± 1	159 ± 2	67 ± 2	158.5 ± 2	67 ± 2	-
366 T…	-	78 ± 1	159 ± 2	67 ± 2	158.5 ± 2	67 ± 2	178.5 + 1
422 T…	-	102 ± 1	173 ± 2	72 ± 2	173 ± 2	72 ± 2	200.5 + 1.5
487 T…	-	106 ± 1	190 ± 2	88 ± 2	190 ± 2.5	87.5 ± 2.5	223.5 + 1.5
562 T…	-	116 ± 1	221 ± 2	103 ± 2	221 ± 2.5	102.5 ± 2.5	269.5 + 2
650 T…	-	152 ± 1.5	274 ± 2.5	126 ± 2.5	274 ± 2.5	125.5 ± 2.5	311.5 + 2
750 T…	-	163 ± 1.5	-	-	276 ± 2.5	127.5 ± 2.5	311.5 + 2 *) 335.0 + 2.5 *)
866 T…	-	189 ± 1.5	-	-	-	-	-
1000 T…	-	210 ± 1.5	-	-	-	-	-
1150 T…	-	210 ± 1.5	-	-	-	-	-
1150 DT…	-	210 ± 1.5	-	-	-	-	-

Table 9

*) Laid length L = 311.5 for Nor-Mex G – size 265
Laid length L = 335 for Nor-Mex G – size 295

8.5.4 Displacement values

WARNING

Explosion hazard
Explosion hazard due to damage to the material caused by excessive misalignments.

- Keep within the permissible tolerances for true radial and axial running during all operating conditions.
- In particular, observe any displacements due to changes in temperature.

NOTICE

Misalignments
The smaller the alignment error,

- the higher the lifetime and reliability of the machine.
- the smoother the operation.

The maximum permissible **displacement values** apply to:

- the **radial run-out** in the radial plane of the flexible element (maximum permissible radial deflection of dial gauge!).
- the **axial run-out** measured on the largest connecting coupling diameter (maximum permissible axial deflection of dial gauge!).

NOTICE

Damage to property
Overspeed
- It is mandatory to observe the maximum permissible speed!

Maximum permissible speed → cover sheet

Maximum permissible displacement values for axial deflection of dial gauge (dependent on the scanning radius of the axial dial gauge).

	Speed range in rpm			
Coupling size	**0…750**	**750…1200**	**1200…1800**	**1800…3600**
154 to 274	0.4 mm	0.4 mm	0.3 mm	0.2 mm
366 to 487	0.6 mm	0.4 mm	0.3 mm	0.2 mm
562 to 1150	0.8 mm	0.6 mm	0.4 mm	0.3 mm

Table 10

Maximum permissible displacement values for radial deflection of dial gauge.

	Speed range in rpm			
Coupling size	**0…750**	**750…1200**	**1200…1800**	**1800…3600**
154 to 1150	0.4 mm	0.4 mm	0.3 mm	0.2 mm

Table 11

8.5.5 Alignment

Alignment can be performed using the laser-optical methods or manually using dial gauges. More precise results are normally obtained using laser-optical devices.

For alignment, support the motor feet using shims or foil sheets. When the machine feet screws are removed, the shimming material shall not be able to move under the foot.

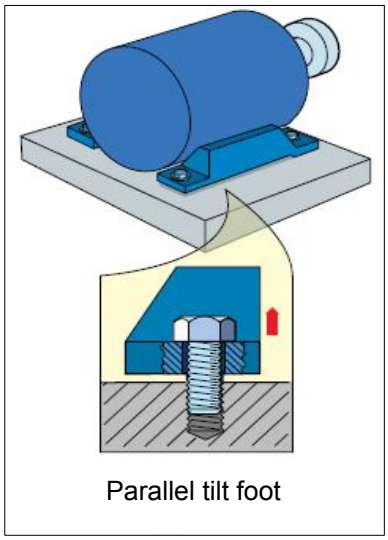

Fig. 23

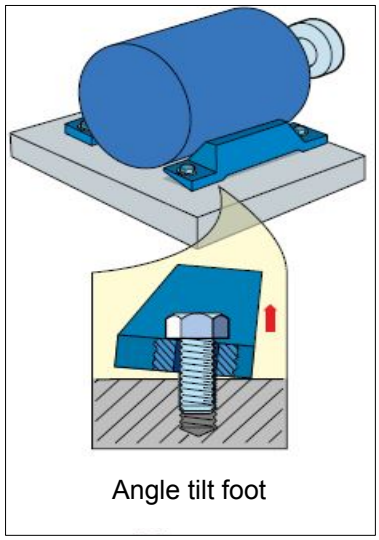

Fig. 24

It is advantageous to use claws for the adjusting screws on the foundation for lateral movement of the drive unit. After this, re-turn the adjusting screws on the machine feet and they shall not about the machine feet. Avoid to use a hammer for lateral machine adjustments as such may damage the ball and roller bearings and the ball bearings.

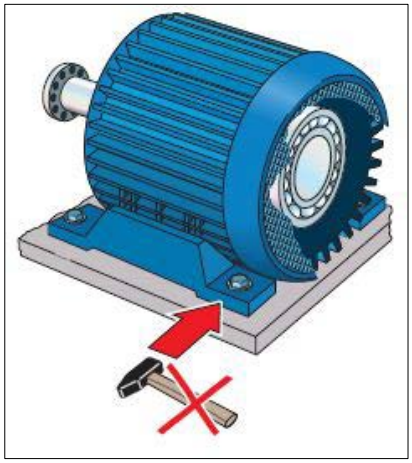

Fig. 25

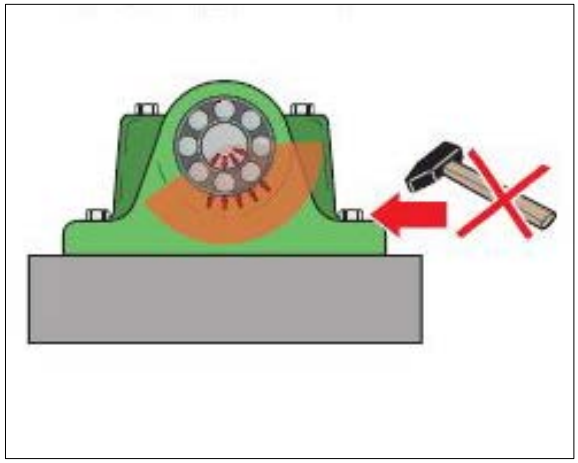

Fig. 26

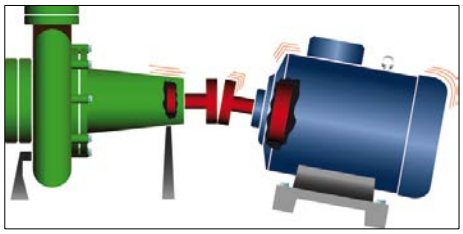

Fig. 27

- More than 50 % of all prematurely occurring machine damages are due to faulty alignment.
- A perfect machine alignment will
  - minimize the restoring forces on the turbo coupling.
  - improve the quiet running of the machine.
  - increase the lifetime of the bearings.

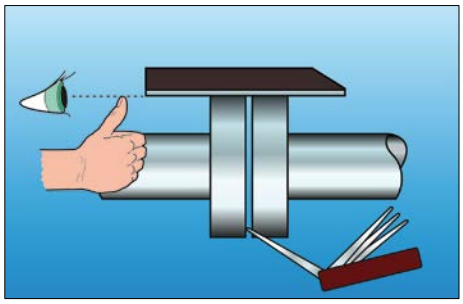

Fig. 28

- Straightedge and feeler gauge will provide differing results dependent on the surface and the user.

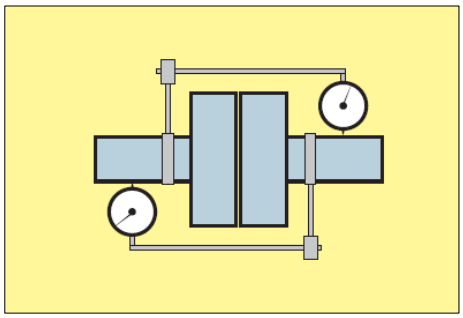

Fig. 29

- Instructed staff only should use the dial gauges.
- Sagging, inner friction, mechanical clearance, reading errors may cause misalignments.

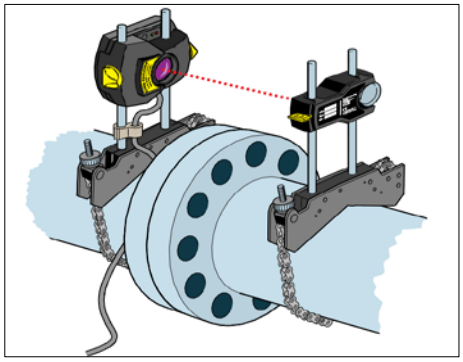

Fig. 30

- More precise results are normally obtained by applying LASER-optical methods, and laser devices are easy and safe to use.

Alignment applying laser-optical methods

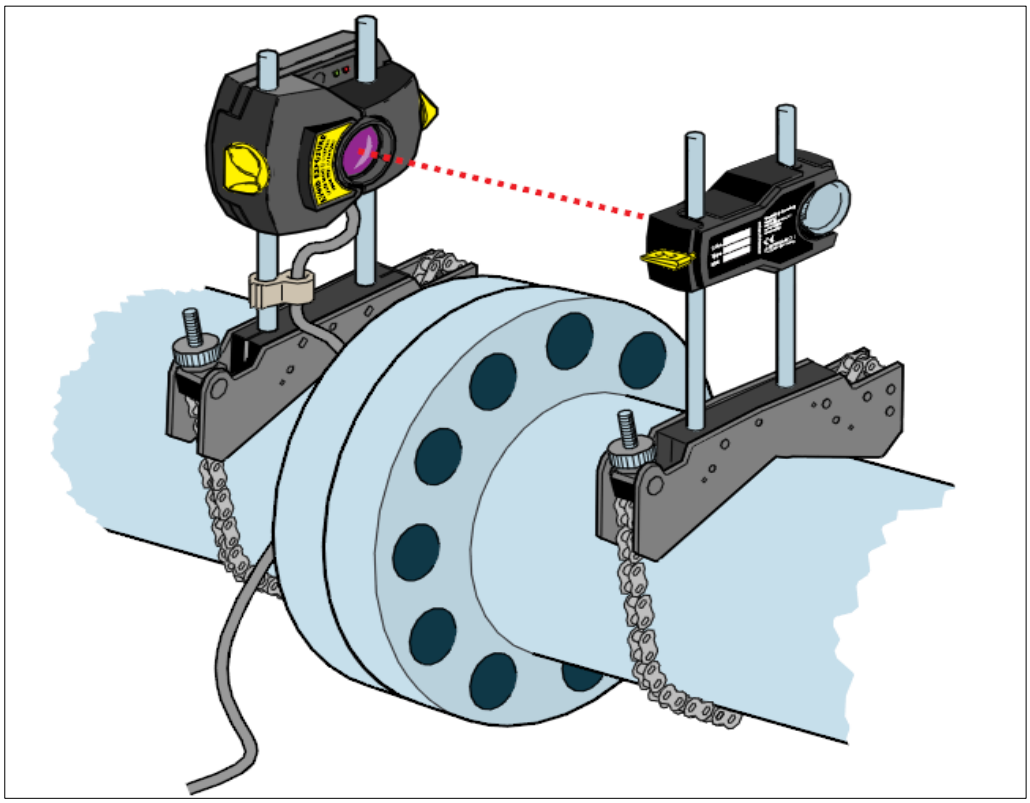

Fig. 31

Advantages of the laser-optical alignment

- Precision alignment without input of measured values, graphical and numerical calculations.
- Graphical display of alignment results and of the shimming and displacement corrections on the machine feet.
- No mechanical lever arms that may influence the measured values; no sagging of holders.
- It is not necessary to remove the turbo couplings for the measured value acquisition.
- Precise and repeatable results whilst providing a high user-friendliness at the same time.
- No predetermined recording positions of measured values - results are already available when the shaft is rotated by less than 90 degrees.
- Data storage and print-out of results for reporting.
- Certifiable calibration of system accuracy.

Description of fixing and alignment process

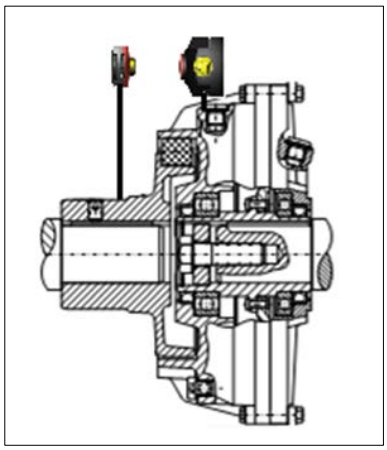

Fig. 32

Fig. 33

- Mount the turbo coupling.
- Install the laser measuring device following the operating instructions and enter all data necessary (position of alignment level, position of motor feet, diameter of connecting coupling, operating speed).
- Align the input and output shaft with each other according to the above schematic sketch (above).
  The displacement values of → Chapter 8.5.4 apply.
- Securely fix the motor and gearbox (input and output unit) to the foundation. **Stability depends on the whole unit and has to be guaranteed!**
- Tighten all screws.
- Check the alignment, and correct, if necessary.
  In case of misalignment on connecting couplings, an unequal gap forms on the periphery.
- Fill in the assembly check report.

Protocols/reports
→ Chapter 14

Alignment using dial gauges

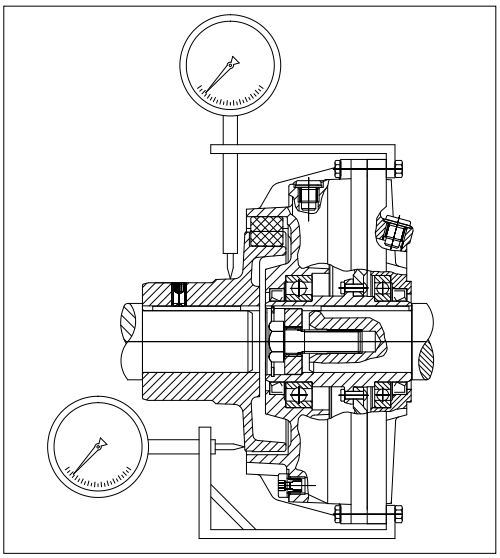

Fig. 34

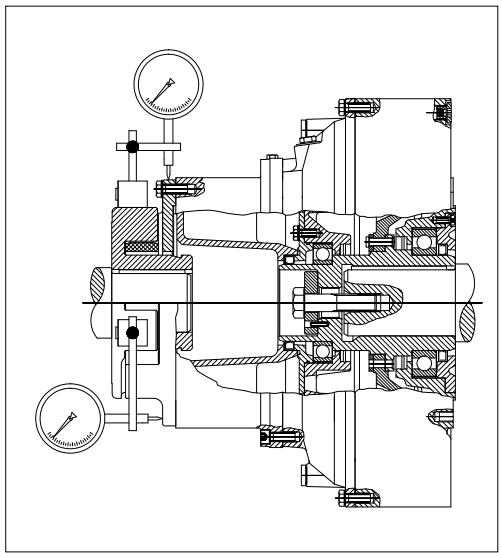

Fig. 35

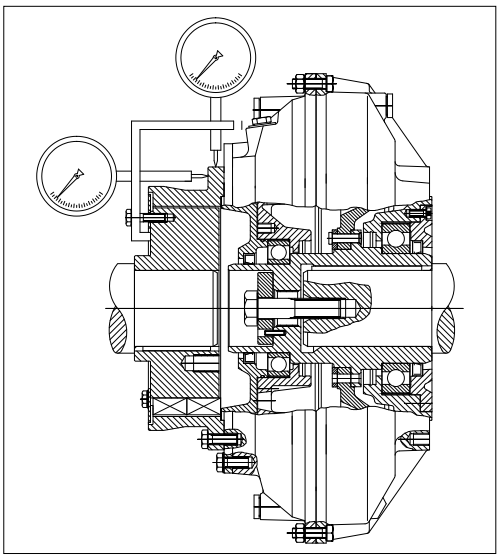

Fig. 36

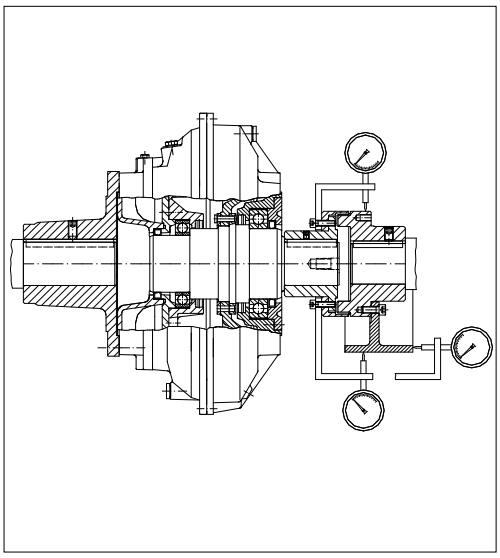

Fig. 37

- Mount the turbo coupling.
- Align the input and output shaft with each other according to the above schematic sketch (above).
  The displacement values of → Chapter 8.5.4 apply.
- Securely fix the motor and gearbox (input and output unit) to the foundation. **Stability depends on the whole unit and has to be guaranteed!**
- Tighten all screws.
- Check the alignment, and correct, if necessary.
  In case of misalignment on connecting couplings, an unequal gap forms on the periphery.
- Fill in the assembly check report.

Protocols/reports
→ Chapter 14

9 Operating fluids

→ Annex (see operating fluids for Voith turbo couplings)

⚠ WARNING

Risk of injury
Hot operating fluid could spray off from defective components or fusible plugs, seriously injuring persons!
- Maintain the turbo coupling regularly!
- Experts only are allowed to work on the turbo coupling!

NOTICE

Damage to property
Use only the operating fluid for the turbo coupling which is indicated on the cover sheet!
- Unsuitable operating fluids may damage the turbo coupling permanently!
- Consult Voith Turbo if you want to use an operating fluid not mentioned.

NOTICE

Environmental pollution
Operating fluids are detrimental to health and may pollute the environment.
- Dispose of used operating fluid via an authorized collecting station in accordance with the national statutory provisions.
- Make sure that no operating fluid gets into the ground or water!

SAFETY INFORMATION

The values mentioned for the pour point, flash and fire point are approximate values and data originating from the oil suppliers. These may vary and Voith Turbo does not assume any warranty!
Country-specific production of the basic oil may result in different values.

- We recommend comparing the data with our specifications at any rate.
- In case of deviations, we urgently recommend consulting the respective oil producer.

9.1 Requirements to be fulfilled by the operating fluid 'water'

Requirement to	
Sealing compatibility	NBR (Nitril-Butadien caoutchouc)
ph value	5…8

The water used should
- to the greatest possible extent, be free from solid matters,
- contain only a low amount of salt,
- contain only a low concentration of other additives.

9.1.1 Usable operating fluids

Normally, drinking water satisfies these requirements.

9.1.2 Water used as operating fluid for turbo couplings with centrifugal valves (types TW…F…)

NOTICE

Damage to property
Insufficient lubrication of turbo couplings with centrifugal valve (types TV...F...).

- Observe the respective type!
- It is allowed to fill in water only in a turbo coupling of type TW.
- When refilling turbo couplings with centrifugal valves (types TW…F…), it is necessary to add the indicated amount of grease to the water.

Type designation
→ Cover sheet

For turbo couplings with centrifugal valves it is necessary to add a low amount of grease to the water. The grease guarantees a permanent functioning of the centrifugal valves.
In the as delivered condition, the corresponding amount of grease is already in the working chamber of the turbo coupling.

Amount of grease required:

Coupling size	366	422	487	562	650	750	866
Amount of grease	80 g	100 g	120 g	150 g	180 g	210 g	240 g

Table 12

Requirements to be fulfilled by the grease:

Requirement to	
Consistency class	2 to NLGI
Thickeners	Lithium complex Calcium complex
Service temperature	-20 °C … 120 °C
Material compatibility	NBR (Nitril-Butadien caoutchouc) FPM / FKM (fluor-caoutchouc)

Proposed greases:

Producer	Designation
Avia	Lithoplex 2 EP
BP	Energrease HTG 2
Castrol	Tribol GR 4020/220-2 PD Tribol GR 4747/220-2 HT
ExxonMobil	Mobilith SHC 220
Fuchs	Renolit CXI 2
Klüber	Petamo GHY 133N
Shell	Gadus S2 V220 2 Gadus S5 V220 2
Total	Multis Complex MV 2 Multis Complex SHD 220

Table 13

The above grease list is a recommendation and does not claim to be complete.

10 Filling, Filling Check and Draining

The quantity and type of operating fluid used substantially determines the performance of the turbo coupling.

- A too high quantity stresses the drive motor more on start-up and results in a higher stall torque.
- A too low quantity thermally loads the turbo coupling more and results in a lower stall torque.

⚠ WARNING

Risk of burning

The turbo coupling gets warm during operation.

- Please observe, in particular, → Chapter 5 (Safety) when working on the turbo coupling!
- Start to work on the turbo coupling only after it has cooled down.

⚠ CAUTION

Danger to health

Operating fluids may cause irritations or inflammation if coming into contact with skin and mucous membranes.

- Please pay attention to the information contained in the safety data sheets.
- Please always wear safety goggles when working with the operating fluid!
- Should you get any operating fluid in your eyes, rinse them immediately using plenty of water and consult a physician without delay!
- After finishing work, carefully clean your hands with soap.

NOTICE

Damage to property

Insufficient lubrication

- When refilling turbo couplings with centrifugal valves (types TW…F…), it is necessary to add the indicated amount of grease to the water.

Impurities in the operating fluid cause higher wear on the coupling as well as damages to bearings so that explosion protection can no longer be guaranteed.

– Make sure that any containers, funnels, filling tubes, etc. used for filling the coupling, are clean.

NOTICE

Damage to property
Non-compliance with specifications.
- Observe the quantity to be filled in that is indicated on the cover sheet of this operating manual.
- An overfilling is not permitted! This would lead to an undue high internal pressure in the coupling, which may destroy the coupling.
- An underfilling is not permitted! This will result in an improper operation of the coupling.
- Do not mix different types of operating fluids.
- Use only the operating fluid indicated on the cover sheet of this manual.
- Ensure that the original sealing rings used are in sound condition.

TurboGuide → https://turbo-guide.voith.com

10.1 Filling the turbo coupling

SAFETY INFORMATION

Turbo couplings are shipped unfilled.
- If operating fluid is included in the scope of supply, it is shipped in a separate container.

10.1.1 How to fill turbo couplings installed in horizontal position, inclination < = 30°

- Turbo couplings of sizes 154 – 274:
  Turn the turbo coupling until the filler plug (item 0390) is on top.
- Turbo couplings of sizes 366 – 1150:
  Turn the turbo coupling until the filler plug (item 0390) that is closest to the sight glass (item 0396) is on top.
- Remove the filler plug (item 0390).
- Remove the top fusible plug for pressure compensation.

- For turbo couplings with centrifugal valves (type TW...F...), fill in the specified amount of grease into the working chamber of the turbo coupling.

Amount of grease
→ Chapter 9.1.2

- Fill in the specified quantity of operating fluid (→ Chapter 9) through a fine strainer
  - mesh size ≤ 25 µm for turbo couplings using oil and operating medium (type T...)
  - mesh size ≤ 50 µm for turbo couplings using water as operating medium (type TW…)

  via the opening in the filler plug (item 0390).

Operating fluid and filling volume
→ Cover sheet

- Tighten the filler plug (item 0390).
- If the coupling is provided with a sight glass (item 0396), tighten the fusible plug.

Tightening torques
→ Chapter 7.2

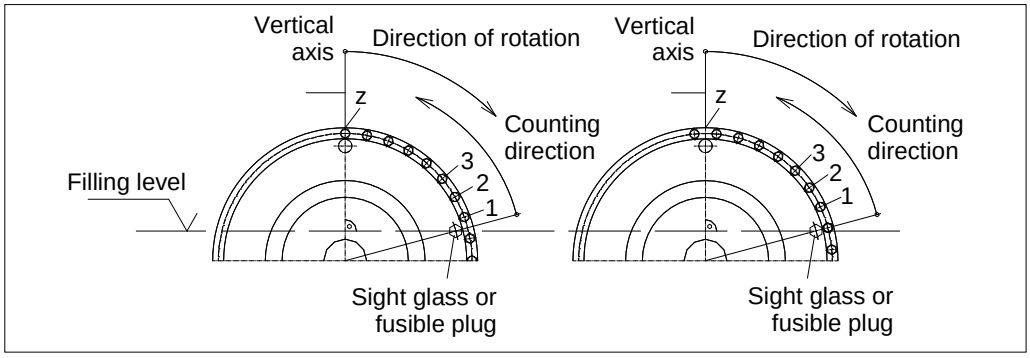

Fig. 38

- Turn the turbo coupling until the operating fluid is just visible on the sight glass (if existing) or until the operating fluid can be seen on the (still) removed fusible plug, but is not yet leaking out.
- Determine the **number z** of the flange screws from the sight glass or fusible plug to the vertical axis. The first screw is the one which center line is in counting direction, **after** the intersection line through the sight glass or the fusible plug.

z = _____

- For later filling level checks, record the **number z** of screws determined. In addition, mark the turbo coupling or the protective cover.

Assembly check report
→ Chapter 14.1 or cover sheet

- Tighten the fusible plug.

Tightening torques
→ Chapter 7.2

- Check the coupling for leaks during a test run (with protective cover!).

10.1.2 How to fill turbo couplings installed in vertical position, inclination > 30°

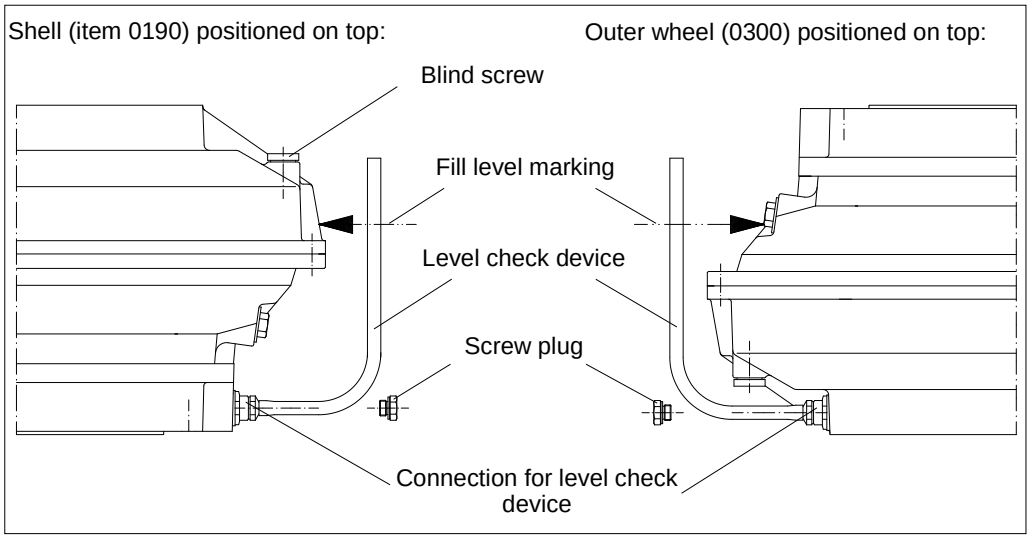

Fig. 39

- Remove two screws being on top (fusible plug or blind screw).
- Fill in the specified quantity of operating fluid (→ Chapter 9) through a fine strainer
  - mesh size ≤ 25 µm for turbo couplings using oil as operating medium (type T…)
  - Mesh size ≤ 50 µm for turbo couplings using water as operating medium (type TW…)

  via a screw hole. The second screw hole serves for pressure compensation.
- Re-close the screw holes on top using the screws. Rotate the turbo coupling with nominal speed for a short time to let the operating fluid **spread evenly**.
- Remove the screws being on top once again.
- Fit the level check device to the connection provided for this purpose. (→ schematic sketch above).
- Provide the level mark on the turbo coupling or protective cover for later level checks.
- Remove the level check device.
- Tighten slackened screws.
  Tightening torque for the screw plug: **30 Nm** (M14x1.5).
- Check the coupling for leaks during a test run (with protective cover!).

The level check device is available at Voith Turbo as accessory for couplings from size 366.

Tightening torques → Chapter 7.2

10.2 Level check

You will find the **filling volume** on the **cover sheet** of this operating manual.

10.2.1 Level check for turbo couplings installed in horizontal position

SAFETY INFORMATION

From size 366, turbo couplings are equipped with a sight glass in the outer wheel.

- The sight glass position is marked by an arrow.

- If no sight glass is provided, turn the turbo coupling until a fusible plug is on top. Then unscrew and remove this fusible plug.
- Turn the turbo coupling until the operating fluid is just visible on the sight glass or until the operating fluid can be seen on the removed fusible plug, but is not yet leaking out.
- Determine the **number z** of the flange screws from the sight glass or fusible plug to the vertical axis. The first screw is the one which center line is in counting direction, **after** the intersection line through the sight glass or the fusible plug.
- Compare the number of screws determined with the number of screws determined during filling. Please observe the marking provided additionally on the coupling or guard.
- Correct the quantity filled in, if necessary.
- Re-insert and tighten any removed fusible plug.
- Check the coupling for leaks during a test run (with protective cover!).

Number z
→ Chapter 10.1

Tightening torques
→ Chapter 7.2

10.2.2 Level check for turbo couplings installed in vertical position

SAFETY INFORMATION

The level of turbo couplings **from size 366** is checked using a level check device. This level check device is available as accessory at Voith Turbo (→ schematic sketch, Chapter 10.1.2).
Turbo couplings **up to size 274** need to be drained to check the filling, and then be re-filled.

- Remove one screw being on top (fusible plug or blind screw) for ventilation purposes.
- Remove the screw plug.
- Fit the level check device to the connection provided for this purpose.
- Compare the level with the marking that was provided when filling in.
- Correct the quantity filled in, if necessary.
- Remove the level check device.
- Tighten slackened screws.
  Tightening torque for the screw plug: **30 Nm** (M14x1.5).
- Check the coupling for leaks during a test run (with protective cover!).

Tightening torques
→ Chapter 7.2

10.3 Draining the turbo coupling

NOTICE

Environmental pollution
Improper disposal of operating fluid may cause damages to the environment!
- On disposal, please observe the applicable laws and the producer's or supplier's instructions.
- Provide suitable containers to collect the operating fluid.

Notes on disposal
→ Chapter 16

Installation and Operating Manual / Version 11 / 3626-011000
en / Protection Class 0: public / 2017-07-10

10.3.1 Draining of turbo couplings without delay chamber installed in horizontal position

- Put a catch pan underneath.
- Turn the turbo coupling until one fusible plug is at the bottom.
- Remove this fusible plug.
- For aeration, remove one opposite filler or fusible plug.
- The operating fluids flows out from the turbo coupling.
- Wait until no more operating fluid comes out.
- Only use original seals.
- Re-tighten all screws.

Tightening torques
→ Chapter 7.2

10.3.2 Draining of turbo couplings with delay chamber installed in horizontal position

- Put a catch pan underneath.
- Turn the turbo coupling until one fusible plug is at the bottom.
- Remove this fusible plug.
- For aeration, remove one opposite filler or fusible plug.
- The operating fluid flows out from the working chamber of the turbo coupling.
- Wait until no more operating fluid comes out.

Coupling size 274:

- Re-tighten the fusible and filler plugs.
- Switch on the drive motor for about half a minute to maximal one minute. The operating fluid in the delay chamber drains into the working chamber.
- Remove the fusible plug again.

Coupling sizes 366 to 1150:

- Remove the nozzle screw / screw plug (items 0455 / 0456).
- Turn the turbo coupling until the opening of the nozzle screw is at the bottom.
- The operating fluid flows out from the delay chamber of the turbo coupling.
- Wait until no more operating fluid comes out.
- Only use original seals.
- Tighten the nozzle screw.

- Turn the turbo coupling until the opening of the fusible plug is at the bottom.
- The remaining operating fluid flows out from the working chamber of the turbo coupling.
- Wait until no more operating fluid comes out.
- Only use original seals.
- Re-tighten all screws.

Tightening torques
→ Chapter 7.2

10.3.3 How to drain turbo couplings installed in vertical position

SAFETY INFORMATION

On account of its design, the turbo coupling cannot completely drain when installed!

- Put a catch pan underneath.
- For aeration, remove one blind screw or fusible plug at the top of the coupling.

Up to coupling size 274:

- Remove one blind screw or fusible plug being at the bottom.

From coupling size 366:

- Remove the connection for the level check device.

- The operating fluids flows out from the turbo coupling.
- Wait until no more operating fluid comes out.
- Only use original seals.
- Tighten slackened screws.
  Tightening torque for the screw plug: **30 Nm** (M14x1.5).
  Tightening torque for the connection: **80 Nm** (M24x1.5).

Tightening torques
→ Chapter 7.2

11 Commissioning

WARNING

Risk of injury
Please observe, in particular, → Chapter 5 (Safety) when working on the turbo coupling!

- A commissioning not performed properly could cause injury to persons, or harm to property and the environment!
- Experts only are allowed to perform commissioning, in particular, first starting of the turbo coupling!
- Secure the machine against unintentional switching on!

Explosion hazard

Marking
→ Chapter 5.2

- Please check with reference to the marking whether the turbo coupling is approved for use in potentially explosive atmospheres.
- Provide the turbo coupling with a protective cover (e.g. perforated sheet, size of holes approx. 10 – 12 mm). This protective cover has to
  - prevent intrusion of damaging foreign particles (stones, corrosive steels, etc.).
  - withstand expected impacts without any major damages, thus preventing contact of the turbo coupling with the protective cover. Especially turbo couplings with outer parts made of aluminum must not get in contact with corrosive steel or iron.
  - collect spraying solder of fusible plugs.
  - collect any operating fluid leaking out to prevent contact with parts (motor, belt) that might ignite or catch fire.
  - provide sufficient ventilation to maintain the maximum surface temperature specified.
    A perforated sheet with 65% hole cross section enclosing the coupling on all sides does not reduce the ventilation (consult Voith Turbo, if necessary).
  - guarantee safety distances to prevent hazard zones from being reached (DIN EN ISO 13857).

  For constructional proposals for protective covers, please contact Voith Turbo.
- The turbo coupling is not equipped with insulated ball and roller bearings! The passage of current and stray currents may come from connected machines (e.g. VFD motor).
- In order to avoid electrostatic charging, it is not allowed to install the turbo coupling with an insulation on both sides.
- Provide an equipotential bonding between the input and output end.
- Provide machines on which overspeed is possible, with a device preventing reliably overspeed (e.g. brake or backstop).

WARNING

Hazard by being pulled in

Slack clothing, long hair, necklaces, rings or loose parts may get caught and be drawn in or wound up causing serious injuries or damage to the turbo coupling and the environment.

- Only wear close-fitting clothes when working!
- Cover long hair with a hair net!
- Do not wear any jewelry (e.g. necklaces, rings, etc.)!
- Never operate the turbo coupling without protective cover!

Technical Data
→ Chapter 2

WARNING

Explosion hazard

Explosion hazard due to frictional heat or overheating.

- Check whether there is any contact in the area of the flexible connecting coupling.
- Check the reference dimension (→ Chapter 13.2.1) on the connecting couplings prior to commissioning.
- If you use a BTS-Ex to limit the maximum surface temperature, make sure not to exceed the maximum permissible temperature of the turbo coupling when switching on the motor.

NOTICE

Damage to property

Never operate the turbo coupling without operating fluid.

- On account of the type of bearings used for standard turbo couplings of sizes 366, 422, 487, 562, 650, 750, 866, 1000 and 1150, at least one standstill is required within three months.
- On account of the type of bearings used for the standard turbo couplings of sizes 154, 206 and 274, at least one standstill is required once a week.

Information with regard to commissioning

- The turbo coupling may be used for any direction of rotation.
- The direction of rotation of the driven machine may be specified! The direction of rotation of the motor must be in accordance with the specified direction of rotation of the driven machine!
- If the motor is started with star/delta connection, switch over from star to delta after 2...5 seconds at the latest.
- In case of a multi-motor drive, you should determine the load of the individual motors. Great differences regarding motor load may be balanced by an appropriate adjustment of the respective coupling filling volumes. **However, do not exceed the maximum permissible coupling filling level!**

Operating fluid and filling volume
→ Cover sheet

Commissioning

- Perform all commissioning work according to the commissioning report.
  Pay special attention to:
  - a normal machine operation
  - normal noise
- Record the commissioning process.

Commissioning report
→ Chapter 14.2

12 Operation

WARNING

Risk of injury
Please observe, in particular, → Chapter 5 (Safety) when working on the turbo coupling!

- An operation presupposes the successful commissioning according to → Chapter 11.

Information with regard to operation

NOTICE

Damage to property
Never operate the turbo coupling without operating fluid.

- On account of the type of bearings used for standard turbo couplings of sizes 366, 422, 487, 562, 650, 750, 866, 1000 and 1150, at least one standstill is required within three months.
- On account of the type of bearings used for the standard turbo couplings of sizes 154, 206 and 274, at least one standstill is required once a week.

During normal operation, no operator actions on the turbo coupling are required.

Perform the necessary maintenance work time-/operating time-based according to → Chapter 13.

If malfunctions occur, eliminate such according to → Chapter 17.

13 Maintenance, Servicing

Definition of the maintenance work described in the following (as per IEC 60079):

Maintenance and Servicing: A combination of all activities conducted in order to maintain an object in a condition or to re-store it to such a condition which meets the requirements of the respective specification and ensures performance of the required functions.

Inspection: An activity involving the thorough examination of an object in order to provide a reliable statement as to the condition of said object, performed without disassembly or, if necessary, with only partial disassembly, supplemented by measures such as the taking of measurements.

Visual inspection: A visual inspection is an inspection in which visible defects, such as missing screws or bolts, are identified without the use of access equipment or tools.

Close-up inspection: An inspection in which, in addition to the areas covered by the visual inspection, defects such as loose bolts, that can only be detected by using access equipment, e.g. mobile stair steps (if required) and tools are identified. For close-up inspections, usually a housing does not need to be opened or the power to the equipment be cut off.

Detailed inspection: An inspection in which, in addition to the areas covered by the close-up inspection, defects such as loose connections, that can only be detected by opening housings and/or using tools and test equipment (if required) are identified.

WARNING

Risk of injury
Please observe, in particular, → Chapter 5 (Safety) when working on the turbo coupling!
- Please always keep access paths free to the turbo coupling!

Qualification
→ Chapter 5.9

- Skilled and authorized persons only are allowed to carry out maintenance and repair work! Qualification is ensured by performing training and giving instructions on the turbo coupling.
- Possible consequences of improper servicing and maintenance could be death, serious or minor injuries, damage to property and harm to the environment.
- Switch off the unit in which the turbo coupling is installed and secure the switch against inadvertent switch-on.
- For all work performed on the turbo coupling ensure that both the drive motor and the driven machine have stopped running and that a re-start is absolutely impossible!
- Components may only be replaced by original spare parts.

Re-mount all protective covers and safety devices in their original position immediately after completion of the servicing and maintenance work. Check them for proper functioning.

Maintenance schedule:

Time	Maintenance work
Routine inspection after 500 operating hours, every 3 months at the latest.	Inspect the machine for irregularities visual inspection: for leaks, noise, vibrations). Check the foundation bolts of the machine, and if necessary, re-tighten them with the specified torque.
3 months after commissioning, at the latest, then every year	Check the electrical system for sound condition if temperature monitoring is required in Chapter 2 (detailed inspection).
Connecting couplings EEK, ENK, Nor-Mex G: 3 months after commissioning at the latest, then every year, however, every 4000 operating hours at the latest and/or deviatingly to → Chapter 13.2.2	Check the flexible element (item 1820), and **replace it in sets of original spare parts when the wear limit has been reached**; if they are worn, metallic contact of the connecting coupling halves may cause sparking. **There is the danger of fire and explosion!** (→ Chapter 13.2 and Chapter 20.4).

Time	Maintenance work
Connecting couplings ERK, EPK: 3 months after commissioning at the latest, then every year and/or deviatingly to → Chapter 13.2.2	Check the flexible element (item 1820), and **replace it in sets of original spare parts when the wear limit has been reached**; if they are worn, the flexible element may break.
After 3 years or 5 years (for ERK and EPK couplings) of use	Replace the flexible element by sets of original spare parts.
When mineral oil is used as operating fluid: After every 15000 operating house	Change the operating fluid or check it for aging and - determine the remaining service life (see records → Chapter 14)! Consult the operating fluid supplier with regard to the permissible values (see Chapters 9 and 10).
On response of a fusible plug	Replace all fusible plugs and change the operating fluid (→ Chapter 13.4). Check the operating conditions (→ Chapter 2). Check the devices provided for temperature monitoring (see Chapter 19: MTS, BTS(ex), BTM).
In case of leaks	On the occasion of an overhaul of the turbo coupling, have shaft sealing rings, sealing rings and flat seals replaced by skilled persons authorized by Voith.
In case of noise, vibrations	Have the cause determined and eliminated by skilled persons authorized by Voith.
In case of impurities	Cleaning (→ Chapter 13.1).
After contact with materials against which NBR (Nitril-Butadien-caoutchouc) and PUR (polyuretane) are not or only partially resistant (close-up inspection).	Replace the flexible element by sets of original spare parts.

Table 14

- Carry out any maintenance work and routine inspections according to the report.
- Record the maintenance work carried out.

Report samples
→ Chapter 14.3

For explosion-proof turbo couplings, the following maintenance work needs to be carried out in addition:

Maintenance intervals	Maintenance work
In case of impurities or dusting: Clean the turbo coupling when used in potentially explosive atmospheres in regular intervals. The intervals are specified by the operator according to the environmental impact to which the equipment is exposed on the jobsite, e.g. in case of a dust accumulation of approx. 0.2 ... 0.5 mm or more.	Cleaning (→ Chapter 13.1).
Maintenance interval → Chapter 2	Replacement of ball and roller bearings (→ Chapter 13.3.3).

Table 15

WARNING

Explosion hazard
Explosion hazard due to maintenance work not performed according to schedule. It is vital to carry out all maintenance work according to the schedule in order to guarantee proper operation within the meaning of explosion-protection.

- Immediately remove any combustible layers of dust on the turbo couplings.
- To ensure a good aeration of the turbo coupling, it is vital to check and clean the protective cover in regular intervals.
- If a fusible plug has responded, immediately cover or close the opening that occurred in order to prevent the ingress of combustible dust into the turbo coupling.

13.1 Outside cleaning

NOTICE

Damage to property
Damage to the turbo coupling due to an improper, unsuitable outside cleaning.

- Please ensure that the cleaning agent is compatible with the sealing materials used, NBR and FPM/FKM!
- Do not use high-pressure cleaning equipment!
- Be careful with gaskets. Do not apply a water and compressed-air jet.

- Clean the turbo coupling with a grease solvent, as and when required.

13.2 Flexible connecting coupling

13.2.1 Checking the flexible element for wear

Connecting coupling of type ERK, EEK, EPK, Nor-Mex G:

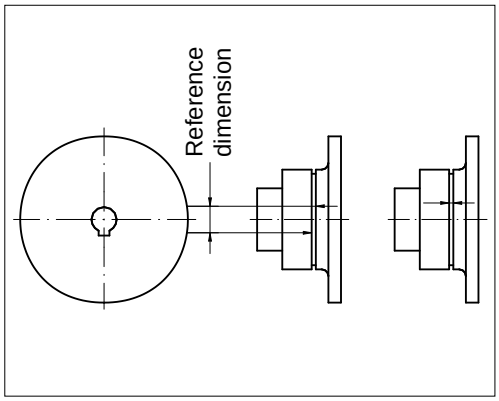

Fig. 40

Connecting coupling of type ENK:

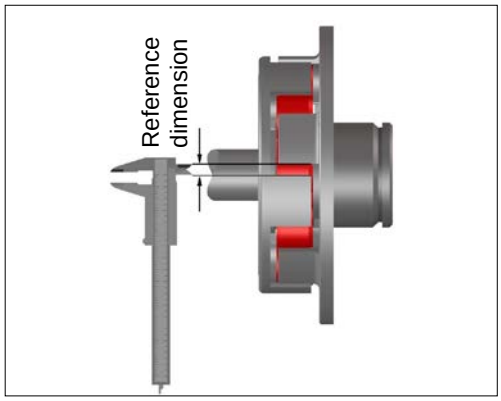

Fig. 41

- Turn the turbo coupling until the flexible element touches without load.

- Provide markings opposite on the hub and flange or the 2nd hub.

- Measure the distance of the rollers in direction of rotation on the outer diameter of the hub.

- Turn the turbo coupling in the opposite direction until the flexible element touches without load.

- Measure the distance of the markings in peripheral direction on the outer diameter of the hub or on the ring in the area of the outer diameter.

- Measure the distance of the rollers in direction of rotation on the outer diameter of the hub.
- The reference dimension is the smallest value of both measurements.

- Document the reference dimension.

Report samples
→ Chapter 14.3.1

Permissible reference diamentions of the flexible connecting couplings in mm

Coupling size	ERK	EPK	EEK-E EEK-M	ENK-SX ENK-SV	Nor-Mex G
154	< 6	-	-	-	-
206	< 6	-	-	> 13.5	-
274	< 8	-	< 8	> 14	-
366	-	< 12	< 8	> 14	< 10
422	-	< 12	< 8	> 15	< 10
487	-	< 12	< 9	> 15	< 10
562	-	< 12	< 11	> 12	< 10
650	-	< 12	< 10	> 12	< 7
750	-	< 12	-	-	< 7
866	-	< 12	-	-	-
1000	-	< 12	-	-	-
1150	-	< 12	-	-	-

Table 16

SAFETY INFORMATION

Lifetime of flexible element

An unusually quickly worn flexible element may be a sign of improper alignment.

- Align the flexible connecting coupling properly.

13.2.2 Maintenance intervals

If, based on the previous wear, wear of 80% of the table value is to be expected until the next check is performed, replace the flexible element or shorten the maintenance intervals accordingly.
On account of changed operating conditions, an increase in wear has to be considered.

NOTICE

Damage to property
Connecting coupling may be damaged due to improper alignment.
- Re-align the unit if the connecting machines were displaced while replacing the flexible element.

13.3 Bearings

13.3.1 Bearing lubrication when mineral oil is used as operating fluid

Please observe the following in order to guarantee lubrication of the bearings:

NOTICE

Damage to property
Never operate the turbo coupling without operating fluid.
- On account of the type of bearings used for standard turbo couplings of sizes 366, 422, 487, 562, 650, 750, 866, 1000 and 1150, at least one standstill is required within three months.
- On account of the type of bearings used for the standard turbo couplings of sizes 154, 206 and 274, at least one standstill is required once a week.

SAFETY INFORMATION

Lifetime grease filling
- Turbo couplings can be provided with special bearings that allow continuous operation and contain a lifetime grease filling.

13.3.2 Bearing lubrication when water is used as operating fluid

The turbo coupling bearings are filled with lifetime grease when water is used as operating fluid. Re-lubrication is not necessary.

13.3.3 Replacement of bearings / re-lubrication

Replacement interval of ball and roller bearings
→ Chapter 2

SAFETY INFORMATION

On the occasion of an overhaul of the turbo couplings, have the bearings replaced / re-lubricated by skilled persons authorized by Voith.

13.4 Fusible plugs

Nominal response temperature of fusible plugs
→ Cover sheet

- The fusible plugs protect the turbo coupling against damage due to thermal overload.
- When the nominal response temperature is reached, the solder core of the fusible plugs melts and the operating fluid leaks out.

Fusible plugs are identified by
- the engraved nominal response temperature in °C,
- a color coding:

Nominal response temperature	Color coding	Operating fluid oil	Operating fluid water
95 °C	without (tinned)	X	X
110 °C	yellow	X	X
125 °C	brown	X	-
140 °C	red	X	-
160 °C	green	X	-
180 °C	blue	X	-

Table 17

SAFETY INFORMATION

- Observe the assembly plan belonging to the order.
- Use only original fusible plugs with the required nominal response temperature!
- Do not replace any fusible plugs by blind screws!
- Do not alter the arrangement of the fusible plugs.
- When water is used as operating fluid, only fusible plugs with a max. nominal response temperature of 110 °C are permitted!
- Never operate the turbo coupling without fusible plugs!

Design
→ Chapter 2

SAFETY INFORMATION

Switching elements, unbalance

- There is a MTS and/or BTS switching element or a blind screw opposite the sight glass (position is marked by an arrow).
- Insert a weight-tolerated BTM blind screw opposite the BTM switching element. Do not insert the BTM switching element opposite a sight glass, blind screw or fusible plug having a lighter weight.

On response of a fusible plug:

- Replace all fusible plugs.
- Change the operating fluid.

Tightening torques
→ Chapter 7.2

⚠ WARNING

Fire hazard

If a brake is used, select the position of the fusible plugs so that they do not spray onto the brake.

- This needs to be checked. In case of any deviation, please consult Voith Turbo.

SAFETY INFORMATION

Thermal monitoring devices

- A thermal monitoring system can prevent that operating fluid is sprayed off (→ Chapter 19).
- Thermal monitoring systems are available at Voith Turbo as accessories.

Arrangement and number of fusible plugs (FP), blind screws, sight glasses and switching elements for outer wheel drive (inner wheel drive) for the standard design.

→ Annex (see arrangement of fusible plugs (FP))

14 Assembly Check, Commissioning and Maintenance Report

WARNING

Risk of injury
Please observe, in particular, → Chapter 5 (Safety) when working on the turbo coupling!

Document all assembly work performed in the assembly check report (→ Chapter 14.1).
Document the commissioning process in the commissioning report (→ Chapter 14.2).

SAFETY INFORMATION

Document all **maintenance work** performed on the
- turbo coupling
  in the maintenance report for the general maintenance (→ Chapter 14.3).
- flexible connecting coupling
  in the maintenance report for the flexible connecting coupling (→ Chapter 14.3.1).

Use copies of the samples, if necessary.

14.1 Assembly check report

Confirm the check or performance of the work by an "**X**" and/or enter the respective values.

Voith turbo coupling

Size / type (→ Chapter 18):	
Serial No. (→ Chapter 18):	

Turbo coupling approved for potentially explosive atmospheres yes ☐ / no ☐

Operating fluid of turbo coupling

Filling:		l
Manufacturer:		
Designation:		

Motor

Serial No.		
Input speed		rpm
Rated power		kW

Driven machine / gearbox

Serial No.	

Assembly work was performed by

Name:	
Date:	
Signature:	

Mounting - check step	**Explanations**	**Completion notice / dimensions**
Check of fixing bolt length (item 0050)	→ order documents	☐
Measurement of true radial running [1] of driven machine.	Manufacturer's specification	Desired: [mm] ACTUAL: [mm]
Measurement of diameter 1) of driving machine.	Manufacturer's specification	Desired: [mm] ACTUAL: [mm]
Measurement of true radial running 1) of driven machine.	Manufacturer's specification	Desired: [mm] ACTUAL: [mm]
Measurement of diameter 1) of driven machine.	Manufacturer's specification	Desired: [mm] ACTUAL: [mm]
Diameter 1) of input.	Chapter 2	Desired: [mm] ACTUAL: [mm]
Diameter 1) of output	Chapter 2	Desired: [mm] ACTUAL: [mm]
Check of back clearance of key (input side).	Chapter 8.2	☐
Check of back clearance of key (output side).	Chapter 8.2	☐
Key moves easily in the keyway of the input hub.	Chapter 8.2	☐
Key moves easily in the keyway of the output hub	Chapter 8.2	☐
Check of the input side shaft-hub connection.	Chapter 8.2	Key convention of shaft and hub are identical H (half), F (full) ☐ yes ☐ no Method applied: ☐ half-key convention ☐ full-key convention
Check of output side shaft-hub connection.	Chapter 8.2	Key convention of shaft and hub are identical H (half), F (full) ☐ yes ☐ no Method applied: ☐ half-key convention ☐ full-key convention

1) Dimensions of shaft and/or hub to be connected by means of the shaft-hub connection.

Installation and Operating Manual / Version 11 / 3626-011000
en / Protection Class 0: public / 2017-01-10

Mounting - check step	**Explanations**	**Completion notice / dimension**
Cleaning of input side shaft and hub and application of lubricant.	Chapter 8.2	☐
Cleaning of output side shaft and hub and application of lubricant.	Chapter 8.2	☐
Connecting coupling hub Set screw (item 1845) tightened with torque.	Chapter 7.1	☐
Fixing bolt (item 0050) was tightened with torque.	Chapter 7.1	☐
When mounting type TN: Are balancing marks of the primary coupling flange in the proper position?	Chapter 8.4	☐
Measurement of installation dimension "L".	Chapter 8.5.3	Desired: [mm] ACTUAL: [mm]
Tightening of foundation bolts.	Chapter 8.5.5	☐
Mounting of coupling Bolts (item 1830) were tightened.	Chapter 7.3	☐
MTS / BTS / BTM (if required) Installation position was checked according to operating manual.	Chapter 2 Chapter 19	☐
MTS / BTS / BTM (if required) Electrical functioning was checked.	Chapter 2 Chapter 19	☐
A guard was mounted as recommended.	Chapter 11	☐
Equipotential bonding between input and output was realized.	Chapter 11	☐
Operating fluid was filled into the coupling.	Chapter 10	☐
For **horizontally** installed turbo couplings only: Check of filling level / determination of number of screws "**z**" for filling	Chapter 10.1 and 10.2	**z** = screws
For **vertically** installed turbo couplings only: Level check device was used. Fill level was marked on the coupling.	Chapter 10.1.2	☐
Alignment of turbo coupling was checked.	Enter alignment values	☐
Radial running of motor shaft is OK		☐
Enter the displacement values (→ Chapter 8.5.4):		
Viewing from the motor towards driven machine	RADIAL (true radial running)	AXIAL (true axial running)
Please tick where applicable - Data from dial gauge ☐ - Data from shaft center offset ☐ - Data (dial gauge) from turbo coupling ☐ - Data (dial gauge) from shaft center displacement ☐ - AXIAL values measured on Ø: . . . . . .mm	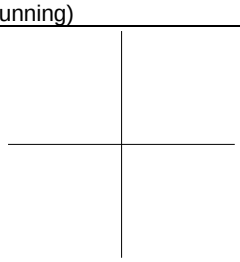	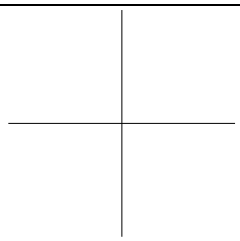
Displacements during operation (to be indicated by the machine manufacturer): Observe displacements resulting from an increase in temperature or from mechanical movements. Enter only those values that change the above-ascertained alignment values.		
- Radially (e.g. different thermal expansion of input / output) . . . . . mm - Axially (e.g. through angular displacements) . . . . . mm - Linear expansion (for installation tolerance - dimension "L", e.g. shaft expansion . . . . . mm		

14.2 Commissioning report

Confirm the check or performance of the work by an "**X**" and/or enter the respective values.

Voith turbo coupling

Size / type (→ Chapter 18):	
Serial No. (→ Chapter 18):	

Turbo coupling approved for potentially explosive atmospheres yes ☐ / no ☐

Commissioning was carried out

after	Oper. hrs.
Name:	
Date:	
Signature:	

Commissioning - check step	**Explanations**	**Completion notice**
Checks prior to switching on the drive motor:		
Assembly/mounting check steps were carried out. Fill in the assembly check report.	Chapter 14.1	☐
Applies only to turbo couplings that are used in potentially explosive atmospheres: Check according to the marking whether the turbo coupling is approved for the use in potentially explosive atmospheres.	Chapter 5.2	☐
For **horizontally** installed turbo couplings only: Check the filling level / determine the number of screws "**Z**" for filling.	Chapter 10.1 and 10.2	☐ / **z** = screws
For **vertically** installed turbo couplings only: Use the fill level check device. Fill level was compared with the previously made fill level marking.	Chapter 10.2.2	☐ / Difference = mm
Fix a guard over the turbo coupling (for design, → Chapter 11).	Chapter 11	☐
Check whether the machine was earthed with a grounding cable (16mm²).		☐
Applies only to installations where overspeed is possible: Provide the unit with a device that reliably prevents overspeeds (e.g. brake or backstop).	Chapter 7	☐
Determine the next standstill of coupling for maintenance services.	Chapter 13	☐
Check whether there is any metallic contact in the area of the flexible connecting coupling.	Chapter 8.5, Chapter 13.2	☐
The reference dimension on the connecting couplings was checked.	Chapter 13.2	☐
Applies only when a BTS-Ex is used as temperature monitoring system: Make sure that the maximum permissible turbo coupling temperature is not exceeded when switching on the motor!	Chapter 2	☐
Check of foundation bolts.		☐

Commissioning - check step	Explanations	Completion notice
Checks during the test run:		
Motor run-up is normal.		☐
Turbo coupling is tight. Check of floor and environment for oil moistening, oil did not leak out.		☐
Machine operation is normal.		☐
Noises are normal.		☐
Checks after switching off the drive motor:		
Turbo coupling is tight. Check of floor and environment for oil moistening, oil did not leak out.		☐
Check of switch units for temperature monitoring [1], if applicable:		
Performance of a visual inspection.	[1]	☐
Removal of dust deposits.	[1]	☐
Check of electrical system.	[1]	☐

1) See separate operating manual / → Chapter 19

14.3 Maintenance report for general maintenance

Confirm the check or performance of the work by an "**X**" and/or enter the respective values.

Voith turbo coupling

Size / type (→ Chapter 18):	
Serial No. (→ Chapter 18):	

Turbo coupling approved for potentially explosive atmospheres yes ☐ / no ☐

The maintenance work was performed

after	Oper. hrs.
Name:	
Date:	
Signature:	

Maintenance - check step	**Explanations**	**Completion notice**
Check for irregularities (every **500 h**, every **3 months** at the latest)		
Turbo coupling is tight. Check of floor and environment for oil moistening, oil did not leak out.		☐
Machine operation is normal.		☐
Noises are normal.		☐
Check of protective cover.	Chapter 11	☐
Check of foundation bolts.		☐
Check of switch units for temperature monitoring [1)], if applicable (**every 3 months**)		
Performance of a visual inspection.	[1)]	☐
Removal of dust deposits.	[1)]	☐
Check of electrical system (after **3 months**, then **every year).**	[1)]	☐
Operating fluid (**every 15000 h**)		
Analysis of operating fluid.		☐
Determination of remaining operating time.		☐ / hours
Change of operating fluid.	Chapter 10	☐
Ball and roller bearings (for the intervals, → Chapter 2)		
Replacement of ball and roller bearings.	Chapter 13.3.3	☐
Cleaning of turbo coupling (**after every contamination**)		
Cleaning was performed.	Chapter 13.1	☐

1) See separate operating manual / → Chapter 19

14.3.1 Maintenance report for flexible connecting coupling

Confirm the check or performance of the work by an "**X**" and/or enter the respective values.

Voith turbo coupling

Size / type (→ Chapter 18):	
Serial No. (→ Chapter 18):	

Turbo coupling approved for potentially explosive atmospheres yes ☐ / no ☐

The maintenance work was performed

after	Oper. hrs.
Name:	
Date:	
Signature:	

Flexible connecting coupling installed (→ cover sheet)**:**

	ERK	EPK	EEK-E EEK-M	ENK-SV ENK-SX	Nor-Mex G
Replace flexible elements after a max. period of [months]	60	60	36	36	36
Perm. reference dimension (→ Chapter 13.2.1)					
80% value [mm]					

Maintenance work:

		EEK, ENK, Nor-Mex G						
		ERK, EPK connecting couplings						
Maintenance work		Commissioning - new flexible element	Check, replace, if necessary	Check, replace, if necessary	Check, replace, if necessary	Check, replace, if necessary	Check, replace, if necessary	Replacement
Operating time [months]		0	3	12	24	36	48	60
1. Flexible element (new condition)	Actual ref. dimension							
	Name							
	Date							
	Signature							
Reduced operating time [months] (→ Chapter 13.2.2)								
2. Flexible element (1st replacement)	Actual ref. dimension							
	Name							
	Date							
	Signature							
Reduced operating time [months] (→ Chapter 13.2.2)								
3. Flexible element (2nd replacement)	Actual ref. dimension							
	Name							
	Date							
	Signature							
Reduced operating time [months] (→ Chapter 13.2.2)								

15 Disassembly of Turbo Coupling

WARNING

Risk of injury
Please observe, in particular, → Chapter 5 (Safety) when working on the turbo coupling!

- Before beginning to work on the turbo coupling, switch off the main switch of the drive motor and secure it against being switched on!
- For all work performed on the turbo coupling ensure that both the drive motor and the driven machine have stopped running and that a re-start is absolutely impossible!

15.1 Preparation

Weight of turbo coupling → cover sheet. Weights of more than 100 kg are stamped on the turbo coupling.

- Prepare suitable tools and lifting appliances.
  Observe the turbo coupling weight!

WARNING

Risk of injury
Damaged load carrying attachments or those with insufficient carrying capacity may break under load, with the consequence of serious or even fatal injuries!

- Check the lifting appliances and load carrying attachments for
  - sufficient carrying capacity (for weight, → cover sheet),
  - sound condition.

WARNING

Risk of injury
Falling parts may seriously injure or kill you.

- Do not walk under suspended loads.

Lifting appliances → Chapter 6.4

- Fix the turbo coupling to a suitable lifting appliance.

15.2 Disassembly of basic type T turbo coupling

NOTICE

Damage to property
Turbo coupling may be damaged due to improper use of the removal device.
- It is not allowed to use an impact screwdriver to apply the torque.

SAFETY INFORMATION

From **size 274,**
- mounting and removal devices can be procured as accessory from Voith Turbo.
- mechanical puller spindles to remove the turbo coupling are required.

From **size 422,**
- hydraulic puller spindles are available.
- We recommend using the hydraulic puller spindles from size 562 in order to be able to reliably apply the necessary forces.

Removal devices
→ Chapter 15.2.1
→ Chapter 15.2.2

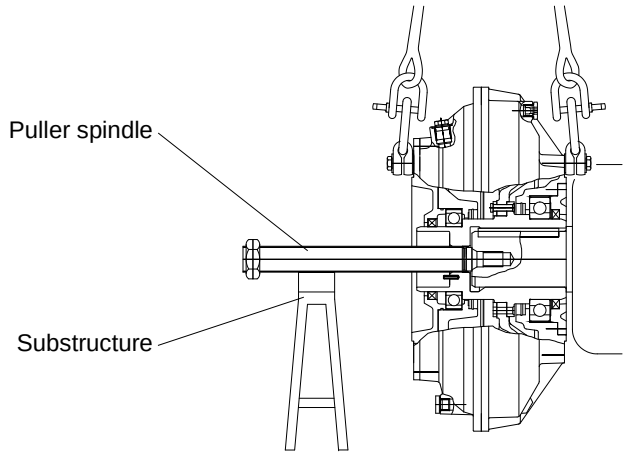

Fig. 42

– **Coupling sizes 154 and 206:**
  - Remove the fixing bolt.
  - Screw a suitable and slightly oiled screw into the internal thread of the holding disk and remove the turbo coupling.

– **Coupling size 274:**
  - Remove the circlip, fixing bolt and holding disk.
  - Put the threaded ring, supplied together with the removal device, into the coupling hub.
  - Secure the threaded ring using the circlip.
  - Apply lubricant to the thread of the puller spindle.
  - Screw the puller spindle into the internal thread of the threaded ring.
  - Support the puller spindle by a substructure.
  - Remove the turbo coupling using the puller spindle.

Lubricant
→ Chapter 8.2

– **Coupling sizes 366 to 1150:**
  - Remove the fixing bolt and holding disk.
  - Apply lubricant to the thread of the puller spindle.
  - Screw the puller spindle into the thread of coupling hub and/or into the threaded ring.
  - Support the puller spindle by a substructure.
  - Remove the turbo coupling using the puller spindle.

Lubricant
→ Chapter 8.2

15.2.1 Removal using the hydraulic removal device

Very high forces with a low torque can be applied with the hydraulic removal device so that no substructure of the removal device is necessary for absorbing the force.

Hydraulic removal devices available at Voith Turbo for turbo couplings of basic type T:

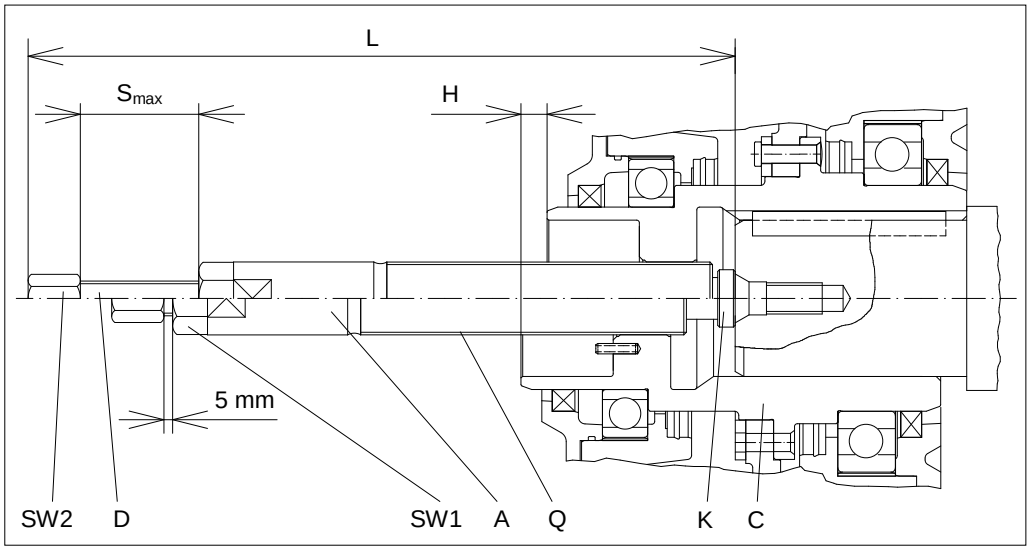

Fig. 43

A:	Puller spindle	L:	Total length
C:	Coupling hub	Q:	Dimension of thread of puller spindle
D:	Thrust bolt	S_{max}	maximum removal dimension
H:	Stroke	SW1:	Width across flats (spindle)
K:	Piston	SW2:	Width across flats (thrust bolt)

Coupling size	L in mm	H in mm	Q in inches	SW1 in mm	SW2 in mm	S_{max} in mm	Article No. of puller spindle
422, 487	406	15	G 1-¼	36	24	58	TCR.10063480
562, 650	580	15	G 1-½	36	-	125	TCR.10450060
750, 866, 1000, 1150	1161	15	G 2-¼	36	36	310	TCR.10668200

Table 18

Lubricant
→ Chapter 8.2

Procedure:

1. Unscrew the thrust bolt (D) until reaching the maximum removal dimension $\mathbf{S_{max}}$.
2. Apply lubricant to the thread of puller spindle (A) and to the thread of thrust bolt (D).
3. Screw the puller spindle (A) via SW1 hexagon, up to the stop, into the thread of coupling hub (C).

NOTICE

Damage to property
If the dimension 5 mm is not observed, there is the risk of seizing of the thread (wear).

- The pressure chamber of the hydraulic removal device is subject to high pressure and must not be opened!

4. Screw in the thrust bolt (D), stop 5 mm before the limit stop.
5. Unscrew the thrust bolt (D).
6. Screw the puller spindle (A) via SW1 hexagon, up to the stop, into the thread of coupling hub (C).
7. Repeat steps 4 to 6 until the turbo coupling can be easily removed with SW1.

15.2.2 Removal using the mechanical removal device

A very careful preparation is necessary for removing the turbo coupling with the mechanical puller spindle in order to apply the necessary high forces without damaging the thread.
To do so, it is necessary to support the puller spindle by a substructure (→ Chapter 15.2).

NOTICE

Damage to property
Turbo coupling may be damaged due to improper use of the removal device.

- It is not allowed to use an impact screwdriver to apply the torque.
- Support the puller spindle by a substructure.
- Use the recommended lubricants.

Lubricant
→ Chapter 8.2

Mechanical removal devices available at Voith Turbo for turbo couplings of basic type T:

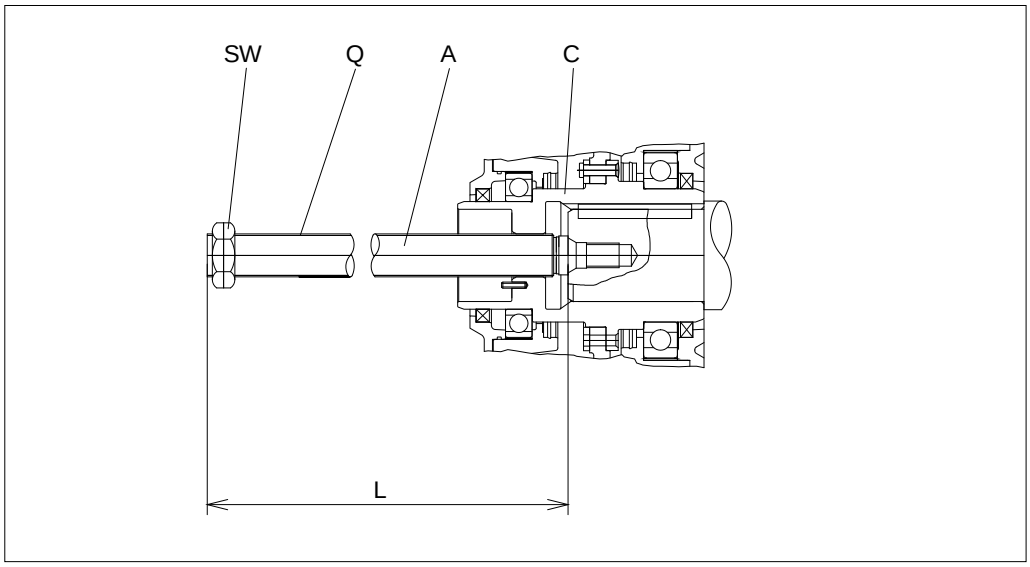

Fig. 44

A:	Puller spindle	Q:	Dimension of thread of puller spindle
C:	Coupling hub	SW:	Width across flats
L:	Total length		

Coupling size	L in mm	Q in inches	SW in mm	Article No. of puller spindle
274	360	G ¾	36	TCR.10657260
366	350	G 1	46	TCR.10457520
422, 487	460	G 1-¼	55	TCR.11055700
562, 650	650	G 1-½	60	TCR.11054150
750, 866, 1000, 1150	1000	G 2-¼	55	TCR.10670710

Table 19

15.3 Reassembly of basic type T turbo coupling

Procedure for reassembly of the turbo coupling is described in → Chapter 8.3.

15.4 Disassembly of basic type TN turbo coupling

For disassembly, proceed according to → Chapter 8.4, in reverse order.

15.5 Reassembly of basic type TN turbo coupling

Procedure for reassembly of the turbo coupling is described in → Chapter 8.4.

16 Disposal

Disposal of the packaging
Dispose of packaging material according to the local regulations.

How to dispose of operating fluids
On disposal, please observe the applicable laws and the producer's or supplier's instructions.

How to dispose of the turbo coupling
Clean the turbo coupling carefully to ensure a purity of material.
Dismantle the turbo coupling, if necessary.
Dispose of the turbo coupling according to the local regulations.

For special information on the disposal of the substances and materials used, please see the following table:

	Kind of disposal		
Material / substance	**Reuse**	**Residual waste**	**Special waste**
Metals	x	-	-
Cables	x	-	-
Seals	-	x	-
Plastics	x [1)]	(x)	-
Operating media	-	-	x [1), 2)]
Packing	x	-	-

Table 20

1) If possible
2) Disposal according to the safety data sheet or the manufacturer's instructions

17 Malfunctions - Remedial Actions

WARNING

Risk of injury
Please observe, in particular, → Chapter 5 (Safety) when working on the turbo coupling!

The following table is intended to help finding the cause of malfunctions or problems quickly and to take remedial action, if necessary.

Malfunction	Possible cause(s)	Remedial action	See
Starting behavior of driven machine is not as expected.	Turbo coupling is not filled with the correct quantity of operating fluid.	Check and correct the quantity filled in.	Chapter 10.1
	The operating conditions have changed.	Please consult Voith Turbo.	Chapter 18
Driven machine does not reach the specified speed.	Driven machine is blocked or overloaded.	Eliminate blocking or the cause of overload.	
	Turbo coupling is not filled with the correct quantity of operating fluid.	Check and correct the quantity filled in.	Chapter 10.1
Drive motor does not reach normal operation within the expected time.	Changeover from star to delta too late.	Changeover from star to delta should be made after 2...5s at the latest.	
	Drive motor is electrically or mechanically not in order.	Have the drive motor checked by authorized personnel.	
Operating fluid leaks out of the turbo coupling.	A fusible plug responded due to overload (excess temperature).	Clarify the cause for the overload. Replace **all** fusible plugs and change the operating fluid.	Chapter 13.4

Malfunction	Possible cause(s)	Remedial action	See
Operating fluid leaks out of the turbo coupling.	The turbo coupling is leaky.	Eliminate the leak, check, in particular, tightening torques and seal rings of fusible and filler plugs as well as sight glasses and, if necessary, check the switching element of the thermal switch unit. If the leak cannot be eliminated, please consult Voith Turbo.	Chapter 7 Chapter 18
An existing thermal monitoring unit (MTS, BTS or BTM) has responded.	The turbo coupling was overloaded.	Clarify the cause for the overload, and avoid another overload. Check and correct the quantity filled in.	Chapter 19 Chapter 10.2
	Thermal monitoring unit (MTS, BTS or BTM) is defective.	Check the monitoring unit.	Chapter 19
Uneven running of the machine (increased vibration).	Foundation fixing is loose.	Retighten the foundation fixing. Align the machine.	
	The machine is not aligned.	Align the machine.	Chapter 8.5
	Machine is not balanced.	Clarify the cause, and eliminate the unbalance.	
	The flexible element of the connecting coupling is defective.	Replace the flexible element in sets. Re-align the machine, if necessary.	Chapter 13.2
	Bearings are damaged.	Eliminate the bearing damage; consult Voith Turbo in case of a bearing damage on the turbo coupling.	Chapter 18
	Loose bolted joints.	Check the coupling components for damages, and replace the same, if necessary. Check the alignment of the machine. Tighten the screws and bolts with the specified tightening torque.	Chapter 7

Malfunction	Possible cause(s)	Remedial action	See
Premature wear of flexible element.	Alignment error.	Eliminate the cause for alignment error. Re-align the machine. Check the flexible element for wear.	Chapter 13.2
	Impermissible temperatures.	Eliminate the cause for excessive temperature. Replace the flexible element. Re-align the machine, if necessary.	
	Contact with aggressive media.	Check the coupling components for damages, and replace the same, if necessary. Replace the flexible element. Re-align the machine, if necessary. Eliminate the cause for contact with aggressive media.	
	Excessive torque	Eliminate the cause for excessive torque. Check the filling level.	Chapter 10.2
Roller wear / breakage of the rollers of connecting coupling EEK, ENK, Nor-Mex G.	Flexible element is worn.	Replace damaged coupling components. Re-align the machine. Shorten maintenance intervals.	
	Excessive torque	Check the coupling design. Please consult Voith Turbo. Install the new coupling. Re-align the machine.	Chapter 18
Please consult Voith Turbo (→ Chapter 18), in case of a malfunction which is not included in this table.			

Table 21

18 Queries, Orders Placed for Field Service Representative and Spare Parts

For

- queries
- Ordering a service engineer
- Spare parts orders
- Commissionings

we need:

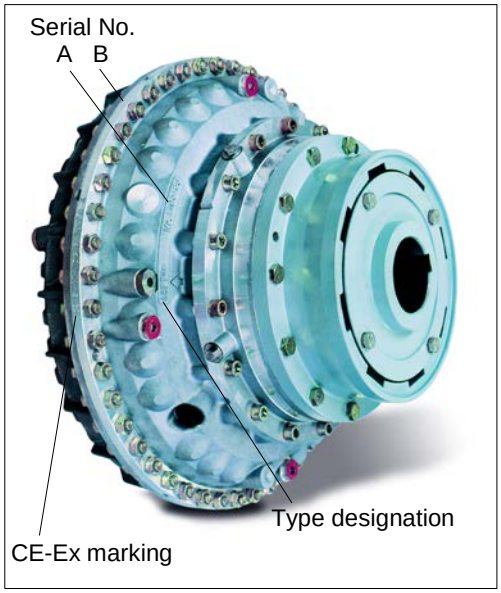

Fig. 45

the **serial number** and **type designation** of the turbo coupling.

→ You will find the serial number and type designation either on the outer wheel / coupling shell (A) or on the turbo coupling periphery (B).
→ The serial number is stamped in with figure stamps.
→ For turbo couplings, intended for the use in potentially explosive atmospheres, you will find the CE-Ex marking on the turbo coupling periphery.

When placing an order for a **service engineer**, **commissioning** or a **service**, we need, in addition
- the turbo coupling installation site,
- the name and address of a contact person,
- details of the malfunction/problem occurred.

When placing a **spare parts order**, we need, in addition,
- the destination for the spare parts shipment.

Please contact the local Voith representative
(outside business hours: the emergency hotline).

Representatives
→ Chapter 22

19 Temperature monitoring

SAFETY INFORMATION

The thermal switch units MTS and BTS can be used in potentially explosive atmospheres to monitor the temperature. The signals serve for pre-warning. The MTS or BTS do not limit the maximum surface temperature.
The BTS-Ex is available as safety device to limit the maximum surface temperature, and it can be used as thermal switch-off device.
Also in this case, it is not allowed to replace the existing fusible plugs by fusible plugs with different nominal response temperatures or by blind screws.
Never bypass safety devices!

DANGER

Electric shock
Electric voltage may kill or severely injure you

- A qualified electrician has to properly carry out the connection to the electric supply network considering the system voltage and the maximum power consumption!
- The system voltage has to be in conformity with the system voltage indicated on the nameplate!
- There has to be a corresponding electrical protection by a fuse on the network side.

The temperature in the turbo coupling can be monitored by means of a limit switch or a temperature instrument.
The following systems are available as limit switch:

- a mechanical MTS system
- an electronic BTS system

These limit switches serve to monitor the temporarily permissible peak temperature, and to prevent a response of the fusible plugs provided the overload is eliminated promptly (e.g. by switching off the drive).
The BTM can be used as temperature measuring device. This way, not only the temporarily permissible peak temperature can be monitored, but also the nominal operation.

19.1 MTS mechanical thermal switch unit for pre-warning

For the MTS, Operating Manual 3626-011800 is available at Voith Turbo.
Or download it at www.voith.com/ fluid-couplings.

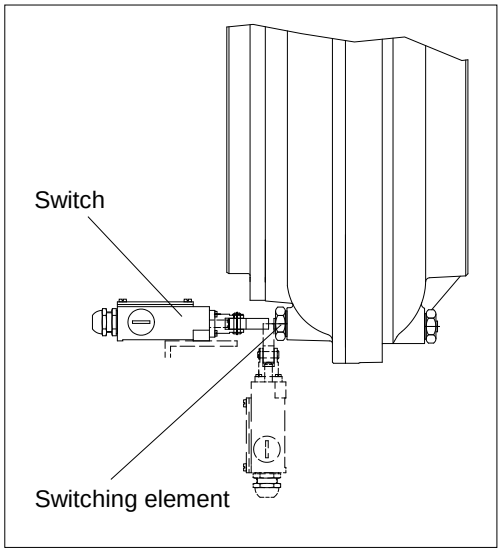

Fig. 46

Functioning:
On excess temperature, the switching element releases a pin. The pin activates a switch on coupling rotation. This signal, for example, may trip an alarm or switch off the drive motor. The switching element needs to be replaced.

In case of inner wheel drive and blocking of driven machine, the function is no longer guaranteed!

The MTS is available for turbo couplings of all sizes.

For arrangement, see the table in → Chapter 22.

The switch is available in two designs:
- enclosed [protection IP 65],
- suitable for use in potentially explosive atmospheres
  type of protection: Ex II 2G EEx d IIC T6 (PTB 03 ATEX 1067 X).
  Ex II 2D IP65 T 80 C (PTB 03 ATEX 1067 X).

**For the BTS, Operating Manual 3626-011500 is available at Voith Turbo.
Or download it at www.voith.com/ fluid-couplings.**

19.2 BTS non-contacting thermal switch unit

19.2.1 BTS non-contacting thermal switch unit for pre-warning

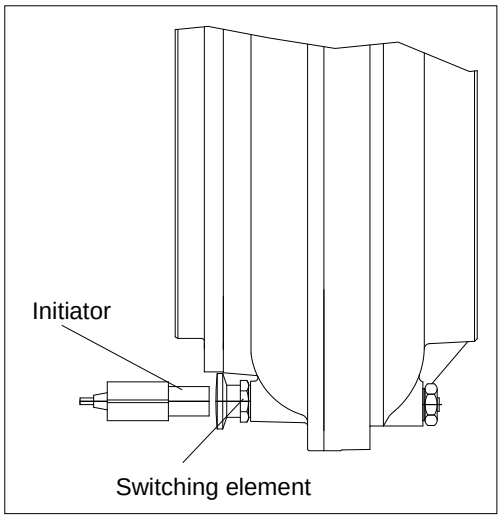

Fig. 47

Functioning:
On excess temperature, the switching element gives a specific signal to the initiator. This signal is transferred to an evaluator and may, for example,
- trigger an alarm
- or switch off the drive motor.

After the turbo coupling has cooled down, the switching element is again ready for service; it does not have to be replaced.

The BTS is provided for turbo couplings from **size 206**.

For arrangement, see the table in → Chapter 22.

Switching element and initiator are
- cast in plastic,
- insensitive to dirt,
- suitable for use in potentially explosive atmospheres
  type of protection: Ex II 2G EEx ia IIC T6 (PTB 00 ATEX 2048 X).
  Ex II 1D Ex iaD 20 T... C (ZELM 03 ATEX 0128 X).

SAFETY INFORMATION

As the control circuit of the evaluator is **not** intrinsically safe, provide an appropriate isolating switch amplifier between evaluator and initiator!

- Isolating switch amplifier type KFD2-SOT2-Ex2 (24 V DC)
  type of protection: Ex II (1) GD [EEx ia] IIC (PTB 00 ATEX 2035).

- Isolating switch amplifier type KFA6-SOT2-Ex2 (230 V AC)
  type of protection: Ex II (1) G [EEx ia] IIC (PTB 98 ATEX 2164).

19.2.2 BTS-Ex non-contacting thermal switch unit for limiting the maximum surface temperature

For the BTS-Ex, Operating Manual 3626-019600 is available at Voith Turbo.
Or download it at www.voith.com/ fluid-couplings.

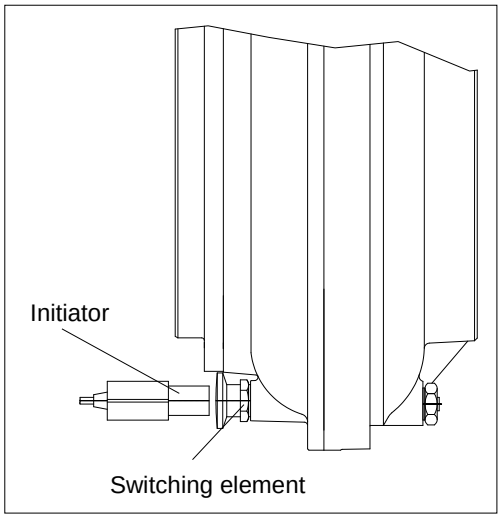

Fig. 48

Functioning:
On excess temperature, the switching element gives a specific signal to the initiator. This signal is sent to an isolating switch amplifier and has to enforce the switch-off of the drive motor.
Use a BTS-Ex approved by Voith for this application.
After the turbo coupling has cooled down, the switching element is again ready for service; it does not have to be replaced.

The BTS-Ex is provided for turbo couplings from **size 366**.

For arrangement, see the table in → Chapter 22.

The BTS-Ex is provided for use in potentially explosive atmospheres as per ATEX directive in Equipment Group II, Equipment Category 2G and 2D (Ex II 2GD).

SAFETY INFORMATION

The BTS-Ex for limiting the maximum surface temperature is approved only in connection with the components supplied by Voith according to BTS-Ex operating manual.
Use of original Voith spare parts is imperative in case of a replacement demand.
The evaluator serves to transmit control commands from potentially explosive atmospheres into non-explosive areas and to safely isolate intrinsically safe and non-intrinsically safe circuits.

- Make sure not to exceed the maximum permissible temperature of the turbo coupling when switching on the motor.

Technical data
→ Chapter 2

**For the BTM, Operating Manual 3626-019800 is available at Voith Turbo.
Or download it at www.voith.com/ fluid-couplings.**

19.3 BTM non-contacting thermal measuring device for prewarning

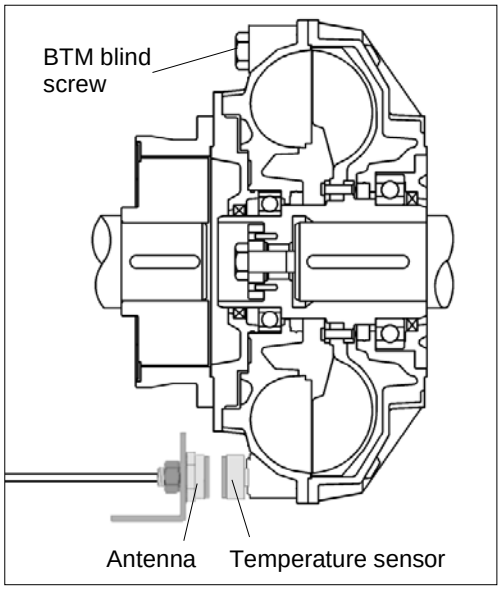

Fig. 49

Functioning:
The temperature sensor permanently transmits a measuring signal to the antenna. This signal is sent to an evaluator with 4 channels.
The measured temperatures of every channel are indicated on the evaluator. In addition, the measured temperatures are output as 4-20 mA signals.

Furthermore, two relay outputs are available per measuring channel with switching thresholds (e.g. pre-warning, switch-off) adjustable via the keyboard on the evaluator.

The BTM is provided for turbo couplings from **size 366**.

For arrangement, see the table in → Chapter 22.

SAFETY INFORMATION

The BTM is not provided for use in potentially explosive areas as per ATEX directive.

Installation and Operating Manual / Version 11 / 3626-011000
en / Protection Class 0: public / 2017-01-10

20 Spare parts information

SAFETY INFORMATION

Variety of variants
Considering the great variety, please find in the following only the basic designs of turbo couplings with constant fill.

- Spare parts must comply with the technical requirements stipulated by Voith. This is guaranteed when original spare parts are used.
  Installation and/or use of non-original spare parts may negatively change the mechanical properties of the **Voith Turbo couplings** and thus have an adverse impact on the safety.
  Voith is not liable for any damages resulting from the use of non-original spare parts.
- You will find the type of your turbo coupling on the cover sheet of this operating manual.
- If a flexible connecting couplings belongs to the scope of supply, you will find the type also on the cover sheet of this operating manual. For matching possibilities of turbo coupling and flexible connecting coupling, please see → Chapter 8.5.3.
- Please observe → Chapter 18 (Queries, Orders placed for Field Service Representative and Spare Parts).
- The customer is only allowed to perform the following work:
  - Replacement of fusible plugs (→ Chapter 13.4).
  - Replacement of flexible element (item 1820) (→ Chapter 13.2, 14.3.1, 20.4).
  - Work according to maintenance report (→ Chapter 14.3).
  - Change of operating fluid (→ Chapter 10).
  - Mounting of parts for which tightening torques are indicated (→ Chapter 7).
  All remaining work may be performed by Voith staff only.

NOTICE

Unauthorized changes or retrofits are not allowed to be performed on the coupling!
Do not retrofit accessories or equipment originating from other manufacturers!
Any changes or conversions performed without the prior written consent of Voith Turbo will result in the loss of any warranty! Any claims will forfeit.

- Professional maintenance or repair can only be guaranteed by the manufacturer!

SAFETY INFORMATION

If the turbo coupling is used in potentially explosive atmospheres (as per ATEX directive), the use of original parts that have been released for use in hazardous areas is allowed only.

20.1 Components overview - Voith turbo coupling 154 – 1150

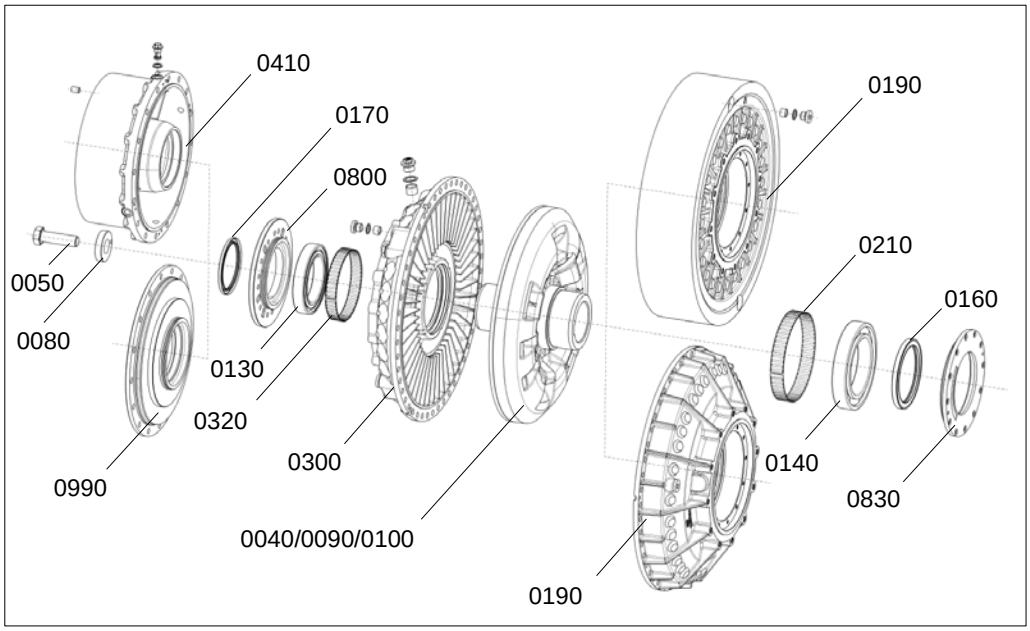

Fig. 50

Item No.	Description	Item No.	Description
0040	Coupling hub	0190	Coupling shell
0050	Fixing bolt	0210	Tolerance ring
0080	Holding disk	0300	Outer wheel
0090	Inner wheel	0320	Tolerance ring
0100	Riveting ring/threaded ring/clamping ring	0410	Delay chamber cover
0130	Grooved ball bearing	0800	Bearing support cover
0140	Grooved ball bearing	0830	Sealing ring cover
0160	Radial shaft sealing ring	0990	Connecting cover
0170	Radial shaft sealing ring		

Table 22

Spare parts for Voith turbo coupling → Chapter 20.2 or Chapter 20.3.

20.2 Spare parts for Voith turbo coupling 154 – 274

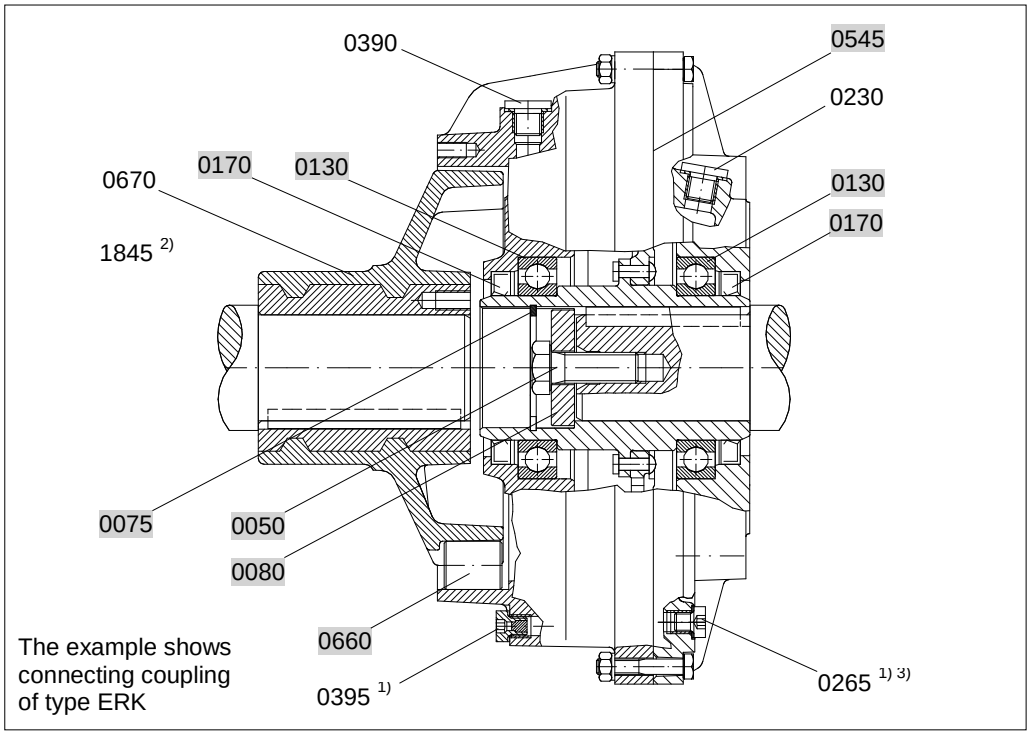

Fig. 51

1) For arrangement and quantity, see the table → Chapter 22
2) Set screw, item 1845, is not shown
3) Not existing for coupling size 154

xxxx Nonrepairable items (→ the following table)
xxxx Repair parts / wearing parts (V) (→ the following table)

Item No.	Nonrepairable items	Item No.	Repair parts / wearing parts (V)	
0230	Filler plug	0050	Fixing bolt	
0265	Blind screw	0075	Circlip	
0390	Filler plug	0080	Holding disk	
0395	Fusible plug	0130	Grooved ball bearing	**(V)**
1845	Set screw	0170	Radial shaft sealing ring	**(V)**
		0545	Sealing tape	**(V)**
Item No.	**Description**	0660	Flexible element	**(V)**
0670	ERK hub			

Table 23

20.3 Spare parts for Voith turbo coupling 366 – 1150

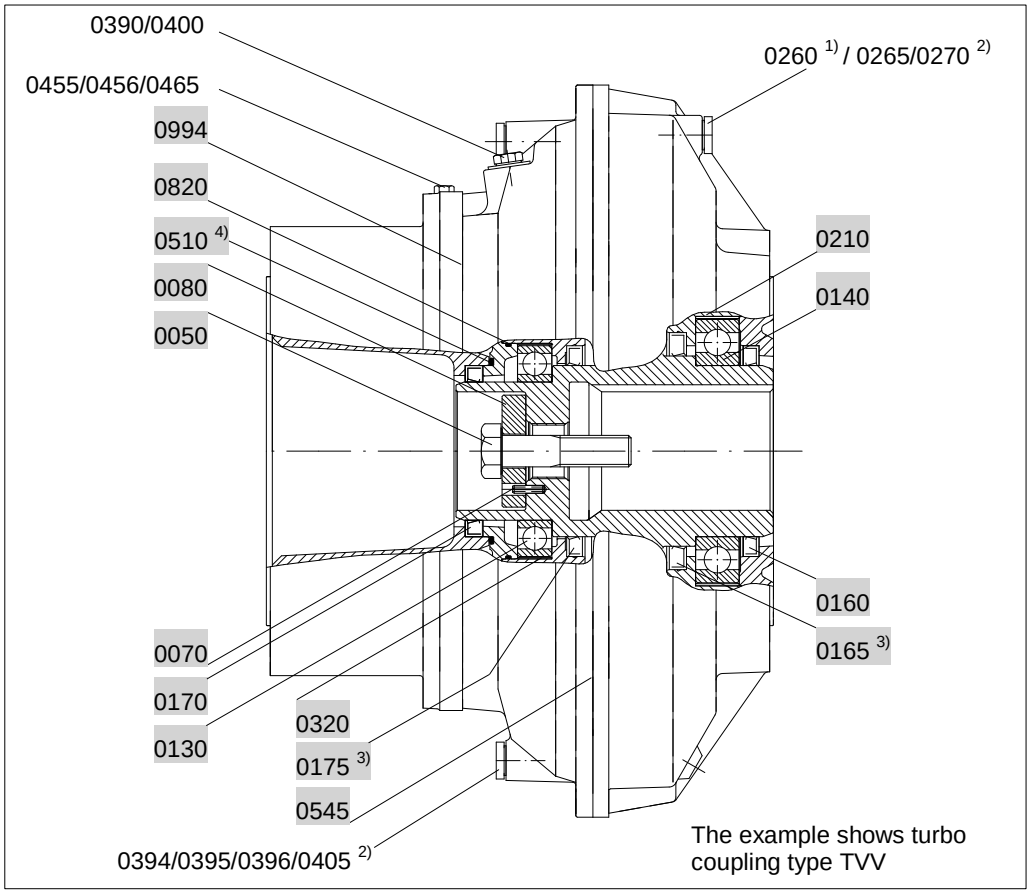

Fig. 52

1) Special design
2) For arrangement and quantity, see the table → Chapter 22.
3) Only for continuous operation or operating fluid 'water' (TW…).
4) For sizes 366 and 422 inserted in the delay chamber groove.

xxxx Nonrepairable items (→ the following table)
xxxx Repair parts / wearing parts (V) (→ the following table)

Item No.	Nonrepairable items	Item No.	Repair parts / wearing parts (V)	
0260 [1)]	Fusible plug	0050	Fixing bolt	
0265	Blind screw	0070	Roll pin	
0270	Sealing ring	0080	Holding disk	
0390	Filler plug	0130	Grooved ball bearing	**(V)**
0394	Blind screw	0140	Grooved ball bearing	**(V)**
0395	Fusible plug	0160	Radial shaft sealing ring	**(V)**
0396	Sight glass	0165	Radial shaft sealing ring	**(V)**
0400	Sealing ring	0170	Radial shaft sealing ring	**(V)**
0405	Sealing ring	0175	Radial shaft sealing ring	**(V)**
0455	Nozzle screw	0210	Tolerance ring	**(V)**
0456	Screw plug	0320	Tolerance ring	**(V)**
0465	Sealing ring	0510	O-ring	**(V)**
		0545	Sealing tape	**(V)**
		0820	O-ring	**(V)**
		0994	Sealing tape	**(V)**

Table 24

1) Special design

20.4 Spare parts for connecting coupling

20.4.1 Connecting coupling on the input side

Flexible pad coupling type EPK

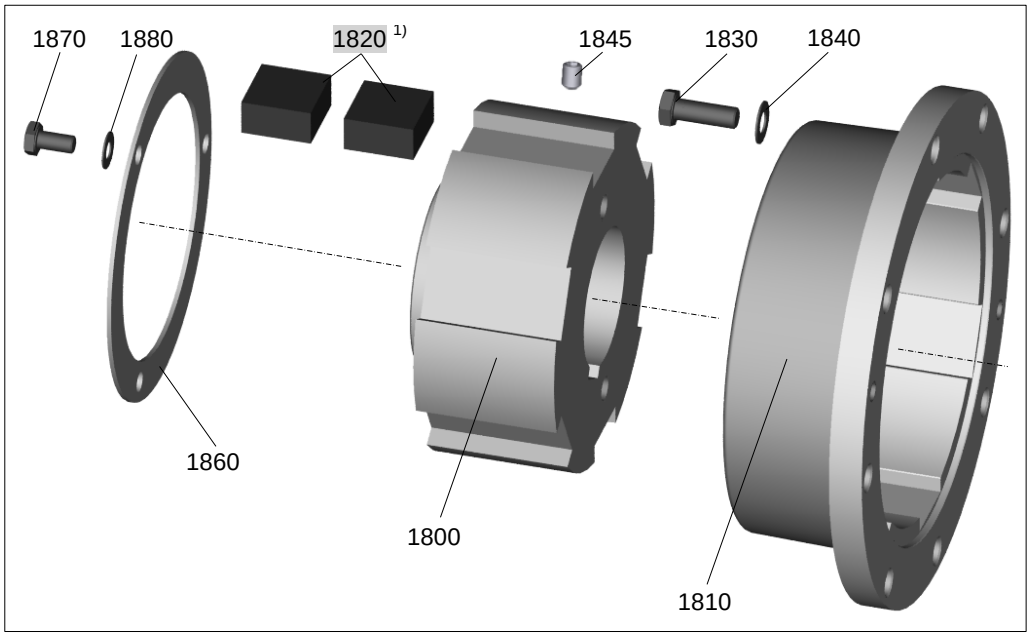

Fig. 53

1) Flexible element is available in various lengths.

Flexible element coupling type EEK

Outer shaft hub, type **EEK-E**

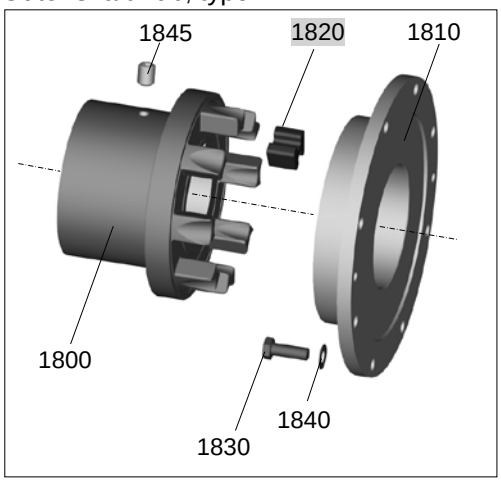

Fig. 54

Inner shaft hub, type **EEK-M**

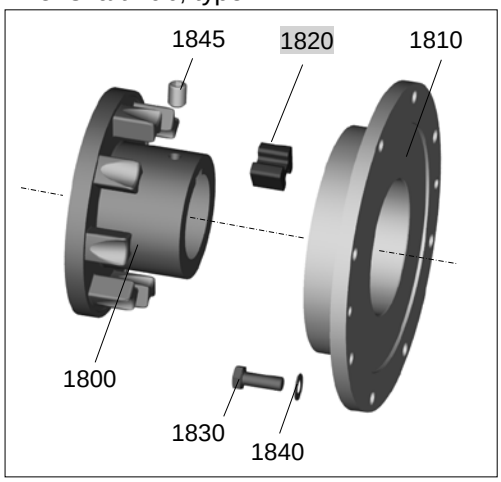

Fig. 55

Flexible cam coupling type ENK

Outer shaft hub, type **ENK-SX**

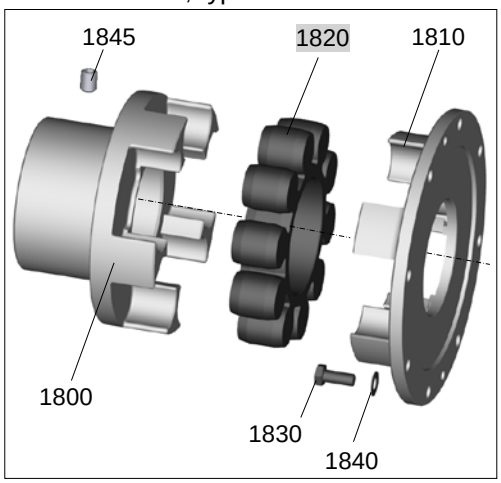

Fig. 56

Inner shaft hub, type **ENK-SV**

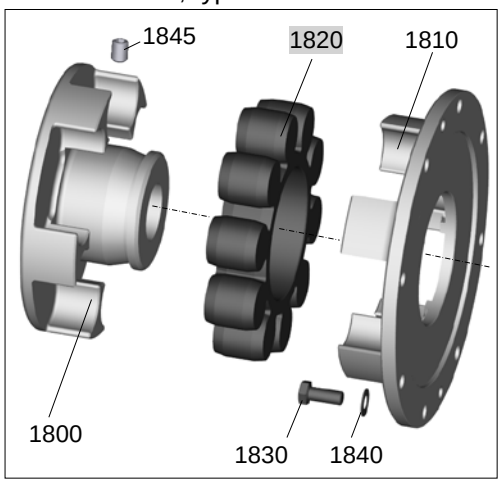

Fig. 57

Item No.	Screws and standard parts	EPK	EEK	ENK
1830	Hex. screw	X	X	X
1840	Lock washer	X	X	X
1845	Set screw	X	X	X
1870	Hex. screw	X	-	-
1880	Spring washer	X	-	-
	Connecting coupling parts / wearing parts (V)			
1800	hub	X	X	X
1810	Ring / flange	X	X	X
1820	Flexible element **(V)**	X	X	X
1860	Sheet-metal holder	X	-	-

Table 25

20.4.2 Connecting coupling on the output side

Nor-Mex G coupling

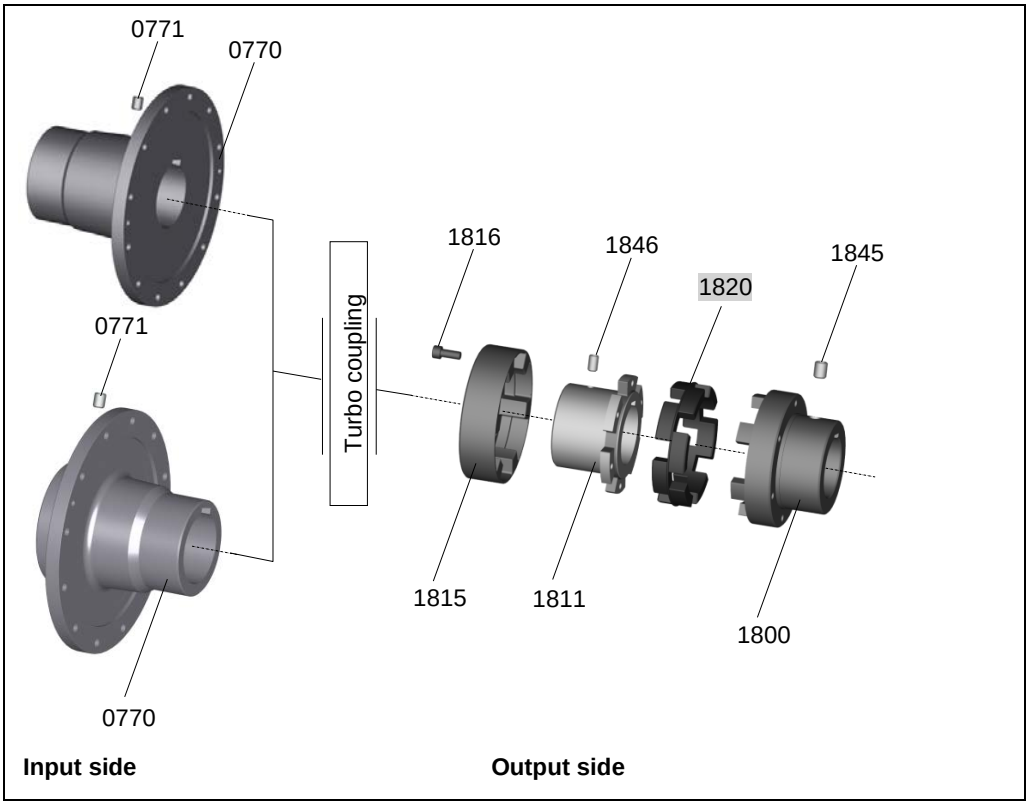

Fig. 58

Item No.	Screws and standard parts	Item No.	Connecting coupling parts / wearing parts (V)
0771	Set screw	0770	Primary coupling flange 1
1816	Socket head screw	0770	Primary coupling flange 2
1845	Set screw	1800	hub
1846	Set screw	1811	Flange hub
		1815	Claw ring
		1820	Flexible element **(V)**

Table 26

21 Index

A

Accident, What to do in case of an accident 22
Alignment 50, 55
Ambient temperature 20
As delivered condition 28
Assembly check report 88

B

Bearing lubrication 83
Bearings 83
Blocking 25
BTM 110
BTS 108
BTS-Ex 109

C

Catch pan 21
Commissioning 73
Commissioning report 90
Components overview 113
Connecting couplings 26, 50

D

Data, additional 10
Declaration of incorporation 11
Direction of rotation 75
Disassembly 94
Displacement values 54
Disposal 101
Draining 70
  Horizontal position with delay chamber 71
  Horizontal position without delay chamber 71
  Vertical position 72

E

Electrical components 19

F

Fastening screw 38
Filling
  Horizontal position 66
  Vertical position 68
Filling the turbo coupling 66
Fire hazard 21
Fixing bolt 44
Flexible connecting coupling 50, 81
Function 7
Fusible plugs 20, 24, 28, 84

G

Grease, Requirements 63
Greases, proposed greases 64

H

Hydraulic removal device 97

I

Information as to dangerous situations 17
Installation and Alignment 39, 87
Intended use 16

K

Keys 41

L

Laid lengths 52
Level check 69
  Horizontal position 69
  Vertical position 70
Level check device 68
Lifting 30
Lifting appliances 30

M

Maintenance 77
  Bearings 83
  Fusible plugs 84
Maintenance report 92
Maintenance report for flexible connecting coupling 93
Maintenance schedule 78
Malfunction - remedy 102
Manufacturer's declaration 11
Mechanical removal device 98
Methane content, Check of methane content 21
Monitoring devices 25
  BTM 110
  BTS 108
  BTS-Ex 109
  MTS 107
Mounting 42, 47
Mounting device 46
MTS 107
Multi-motor drive 75

N

Noise 18

O

Operating fluid 23
Operating fluids 28, 61
water 62
Operation 76, 87
Order 105
Ordering a service engineer 105
Outside cleaning 80
Overload 20, 25

P

Packing 35
Power transmission 22
Preparation 40, 94
Preservation 35
Product monitoring 27
Protective cover 73
Protective hood 73

Q

Qualification 27
Queries 105

R

Reference dimensions of flexible connecting coupling 82
Re-lubrication 84
Remaining risks 22
Removal device
hydraulic 97
mechanical 98
Repair 111
Replacement of bearings 84
Report / Protocol 88, 90, 92, 93

S

Safety 15
Safety information 15
Scope of supply 28
Selection and qualification of staff 27
Serial No. 105
Servicing, Maintenance 77
Sound pressure level 18
Spare parts 13
Spare parts for connecting coupling 117
Spare parts for Voith turbo coupling 114
Spare parts information 111
Spare parts orders 105
Standstill 74
Star / delta connection 75
Starting characteristic 23
Storage 28
Structural changes 17
Switching off in case of turbo coupling overload 25
Symbols 16

T

Technical Data 9
Temperature monitoring 9, 106
Tightening torques 37, 38
Tools 39
Transport 28, 29

U

Unintended use 17
User Information 13

W

Warming up 18, 23
What to do in case of accidents 22
Working on the turbo coupling 17

22 Annex

Translation

EU Declaration of Conformity as defined by Directive 2014/34/EU, Annex VIII

29.3.2014 | EN | Official Journal of the European Union | L 96/309

We,

Voith Turbo GmbH & Co. KG
Voithstraße 1
74564 Crailsheim

hereby declare that the equipment with

Designation:	**Turbo Coupling with Constant Fill**
Type:	**T…**
Serial No.:	**see shipping documents**

satisfies all relevant requirements as per Annex I of Directive 2014/34/EU up to the interfaces described in the instruction manual. It is necessary to observe the technical data contained in the instruction manual.

The above-described object of the declaration satisfies the relevant harmonization legislation of the union.

The following harmonized standards (or parts thereof) have been applied:

- EN 1127-1:2011
- EN 1127-2:2014
- EN 13463-1:2009
- EN 13463-5:2011
- EN 13463-8:2003
- EN 1710:2005 + A1:2008

Other technical specifications applied:

- EN ISO 12100:2010
- TRGS 727

The manufacturer is solely responsible for the issuance of this declaration of conformity.

You may request the relevant technical information from the person authorized for technical information at

Voith Turbo GmbH & Co. KG
Bernhard Schust
Voithstraße 1
74564 Crailsheim

Place, Date / Signature: Crailsheim, 2017-11-17

Senior Vice President Engineering

Place, Date / Signature: Crailsheim, 2017-11-17

i. A. S. Parchitke

Technical Documentation

Konformitätserklärung_T_00_EN.docx

VOITH

Voith Turbo
Division Industry

Work Sheet amd499.5

Preservation and Packaging Instructions

T...

As delivered condition:
The as delivered condition of the Voith Turbo Couplings depends on the mode of transport and the storage period.
Condition No. 1 represents the as delivered standard. For deviations, please see the ordering documents.

No.	Transport and admissible storage period	Packing / Measures taken	Preservation	
			outside	inside
1	- Overland / air transport - Storage up to 6 months indoors (building)	- Device to suit transportation - Packed in PE foil - Weather protection provided by the means of transport	yes	no
2	- Sea transport - Storage up to 6 months indoors (building)	- Means suitable for transport - Sharp edges protected - Desiccant according to DIN 55473/55474 - Shrink-wrapped in PE foil - Water-proof cardboard or wooden box/crate - Inside of box/crate lid lined with sealed ribbed PE sheets (Akylux). PVC foil is put underneath in addition at butt joints	yes	no
3	- Sea transport - Storage up to 12 months indoors (building)	- As stated in 2	yes	yes
4	- Sea transport - Storage up to 24 months indoors (building)	- As stated in 2; shrink-wrapped in aluminum sandwich foil instead of PE foil.	yes	yes

Opening of the packaging:
Re-close airtight foils that have been opened for inspection upon receipt for further storage. Renew the desiccants.

Extension of the storage period:
The allowable storage period may be extended maximal three times according to the following descriptions. To do so, check the packaging and renew it, if necessary. Replace the desiccants and re-close the foil packing airtight.

External preservation / re-preservation:
Renew the external preservation according to the allowable storage period. Spray bright metal parts (hub bores, brake disks, etc.) with Houghton Ensis DWG2462.

Internal preservation / re-preservation:
Renew the internal preservation annually (for Condition No. 4: every 2 years). Wet the turbo coupling inside with an oil selected from the selection list.

- Turbo coupling on stock or mounted (turnable):
  For re-preservation, fill the turbo coupling with oil above the axis of rotation center and rotate the turbo coupling input and output at least once.
- Turbo coupling mounted (non-turnable):
  Fill the turbo coupling up to the uppermost fusible plug.

Then drain the oil and close the plug on the turbo coupling according to the specified procedure.

VOITH

Voith Turbo
Division Industry

Work Sheet amd499.5

Preservation and Packaging Instructions

T...

Selection list for internal preservation agents:

Producer	Designation
Castrol	Rustilo 846
Mobil	Mobilarma 524 (SAE 30)
Houghton	Ensis Engine Oil 20
Wintershall	Wintershall Antikorrol 20W-20
The recommended operating fluids may also be used for preservation.	

Protect the turbo coupling against weather and environmental influences if it is installed in a machine that is not set into operation. Renew the external re-preservation every 6 months, internal re-preservation once a year. If necessary, clean the turbo coupling outside before performing re-preservation. Proceed for external and internal re-preservation as described above.

Directive D-0503.0

Operating Fluids for Voith Turbo Couplings

Version 0, 2017-09-25
91601312610 en, Protection class: 0: Offen (public)
Uncontrolled copy

Issued by:	Pilz, Thorsten	Date:	2017-09-25
Checked by: Released by:	Pilz, Thorsten Schust, Bernhard	ID Number:	91601312610
Products:	T… / TP… / S…		
Divisions:	Industry		
Subject areas:	Operating fluids		
Confidentiality:	**released for external use (customers / suppliers)**		

Contents

1	**Field of Application**	**3**
2	**Requirements to be fulfilled by the Operating Fluid**	**4**
3	**Usable Operating Fluids**	**5**
3.1	**Specifications / approvals**	**5**
3.2	**Operating temperature frequently above 100°C**	**5**
3.3	**Proposed operating fluids VG 32 (T… / TP…)**	**5**
3.4	**Proposed operating fluids VG 32 (S...)**	**6**
3.5	**Proposed operating fluids for low temperature application PAO VG 32 (S…)**	**9**
3.6	**Proposed operating fluids VG 46 (S...)**	**10**
3.7	**Proposed operating fluids for low temperature application PAO VG 46 (S…)**	**11**
3.8	**Proposed operating fluids VG 100 (S...)**	**12**
4	**Operating Fluids for Use in Food Industry (T... / TP...)**	**13**
5	**High-flash Point Fluids - HFD-U (T...)**	**14**
6	**Quickly Biodegradable Fluids - HEES (T...)**	**15**
7	**Requirements to be fulfilled by the Operating Fluid 'Water'**	**16**
8	**Criteria and Information for Evaluation of used Oils**	**17**
8.1	**General**	**17**
8.2	**Sampling**	**17**
8.3	**Scope of analysis**	**18**
8.4	**Criteria / information for the evaluation of used oils**	**18**
8.4.1	Additives	18
8.4.2	Oil condition	19
8.4.3	Neutralization number NZ (DIN 51558)	19
8.4.4	Water content (DIN ISO 3733)	20
8.4.5	Air release property LAV (DIN ISO 9120)	20

1 Field of Application

The list below contains the requirements to be fulfilled by operating fluids and a selection of types proposed for hydrodynamic couplings.

Turbo coupling with constant fill	(T…)
Fill-controlled turbo coupling	(TP…)
Variable speed turbo coupling	(S…)

Any other fluids require Voith's prior approval.
For all materials getting in contact with the operating fluid, the manufacturer's approval is required.

In individual cases, special requirements can rule out a selection according to this list; in this case, the deviating specifications will be agreed upon order handling or they will be specified in the operating manual.

Density / filling and heat capacity of fluids which may deviate from those of mineral oil need to be considered when designing the coupling.

Application instructions specified by the producers that are normally stated in the product and safety data sheets are to be observed.

2 Requirements to be fulfilled by the Operating Fluid

The characteristics as per Directive D-0502 are required as far as the product is concerned. Special attention has to be paid to:

- Viscosity: ISO VG 32 as per DIN ISO 3448 *)
- Viscosity on start-up:
  less than 15000mm²/s **(T…)**
  less than 1000mm²/s **(S… - displacement pump)**
  less than 500mm²/s **(TP…)**
  less than 250mm²/s **(S… - centrifugal pump)**
- Pour point: 4°C below the minimum ambient temperature or lower
- Flash point: higher than 180°C and at least 40°C above the nominal response temperature of the fusible plugs
- Resistance to aging: aging-resistant refined product
- Cleanliness grade: 21/18/15 as per ISO 4406
  9 as per NAS 1638
  10 as per SAE AS 4059
- Sealing compatibility: NBR (Nitril-Butadien caoutchouc)
  FPM / FKM (fluor-caoutchouc)
- Fire point Ex: at least 50°C above the max. surface temperature
- Air release property: ≤ 5 min. at 50°C as per DIN ISO 9120 **(TP… / S…)**

Beneficial additional characteristics:

- Test to FE8:D7.5/80-80: abrasion of rolling elements <30mg
- Resistance to aging: increased resistance to aging

*) In special cases ISO VG 10 – 46 (T…), ISO VG 22 – 68 (TP…), ISO VG 100 (S…) can be applied.

3 Usable Operating Fluids

3.1 Specifications / approvals

- Hydraulic oils HLP 32 to DIN 51524, Part 2 *)
- Lubricating oils CLP 32 to DIN 51517, Part 3
- Steam turbine oils LTD 32 to DIN 51515, Part 1 *)
- HD engine oils SAE 10 W (T… / TP…)
- ATF type A Suffix A (TASA) and type Dexron II, IID, IIE, III, MERCON (T… / TP…)
- M-891205 and M-921253 (T… / TP…)

*) In special cases ISO VG 10 – 46 (T…), ISO VG 22 – 68 (TP…), ISO VG 100 (S…) can be applied.

3.2 Operating temperature frequently above 100°C

FPM/FKM is recommended as sealing material; when selecting the mineral oil, please ensure that it provides excellent oxidation resistance.

3.3 Proposed operating fluids VG 32 (T… / TP…)

Producer	Designation	Pour point in °C	Flash point in °C	Ignition point > 250°C	FE8 fulfilled
Addinol Lube Oil GmbH	Hydraulic oil HLP 32	-21	195		
Avia	Avia Fluid RSL 32	-27	214	X	
	Gear RSX 32 S	-33	210	X	
Castrol	Alpha EP 32	-27	218	X	X
	Alpha VT 32	-42	234	X	X
	Hyspin ZZ 32	-30	216		X
	Hyspin AWS 32	-27	200		
Cepsa	HIDROSIC HLP 32	-24	204		
	EP 125	-30	206		
Chevron-Texaco	Texaco Rando HD 32	-30	196		
ENI	Agip Oso 32	-30	204		
	Agip Blasia 32	-29	215		
ExxonMobil	DTE 24	-27	220	X	
	Mobilfluid 125	-30	225		
	Mobil SHC 524	-54	234		
Fuchs Europe	Renolin MR10	-30	210		
	Renolin B10	-24	205		

Producer	Designation	Pour point in °C	Flash point in °C	Ignition point > 250°C	FE8 fulfilled
Klüber	Lamora HLP 32 (Next Generation)	-18	210		
	Klübersynth GEM 4-32 N [1)]	-50	200		X
Kuwait National Lubricant Oil Company (KNLOC)	Q8 Haydn 32	-30	208		
	Q8 Holst 32	-30	208		
Ravenol	Hydr. oil TS32	-24	220		
Shell	Tegula V32 [2)]	-33	211	X	X
	Tellus Oil S4 ME 32 [1)]	-54	240		
	Tellus Oil S3 M 32	-39	236		
SRS	Wiolan HS 32	-24	220	X	
	Wiolan HF 32 synth [1)]	-60	245		X
Total	Azolla ZS 32	-27	210		
	Azolla VTR 32	-36	230	X	X
	Preslia GT	-15	225		X

1) The operating fluid has got a lower density, its use has to be agreed with Voith.
2) Not admitted for use in TP… / DTP… .

Notice

The values mentioned above are approximate values and data originating from the oil suppliers. Voith Turbo does not assume any warranty! Country-specific production of the basic oil may result in different pour point, fire point and flash point values.

In case of critical applications, we recommend consulting the respective oil supplier!

3.4 Proposed operating fluids VG 32 (S...)

Producer	Designation	Pour point in °C	Flash point in °C	Ignition point > 250°C	FE8 fulfilled
ABC Maziva	INA Fluid V 32	-36	230	X	
Addinol Lube Oil GmbH	Hydraulic oil HLP 32	-33	235	X	
	Hydrodynamic transmission oil SGL 18	-39	225	X	
	Turbine oil TP 32	-15	220	X	
AP Oil International	AP Torque Oil 32	-25	210	X	
Autol	Hydraulic Oil HYS 32	-28	208	X	
Avia	Gear RSX 32-S	-33	211	X	X

Producer	Designation	Pour point in °C	Flash point in °C	Ignition point > 250°C	FE8 fulfilled
Bharat Petroleum Corp. Ltd.	MAK Hydrol HLP 32	-9	190	X	
Caltex	Torque Fluid 32	-27	210	X	
Castrol	Alpha EP 32	-27	218	X	X
	Alpha VT 32	-42	234	X	X
	Hyspin AWS 32	-27	200	X	
	Hyspin HL-XP 32	-36	230	X	
	Hyspin ZZ 32	-30	216		X
Cepsa	EP 125	-30	206	X	
	Hidraulico HM 32	-24	204	X	
	Mistral 32	-24	204	X	
	Turbinas EP 32	-12	218	X	
Chevron-Texaco	Chevron Clarity Hydraulic Oil AW 32	-33	222		
	Chevron GST Oil 32	-36	222		
	Chevron Hydraulic Oil AW 32	-25	220		
	Texaco Rando HD 32	-30	196	X	
	Texaco Textran V 32	-39	220		
ENI	Agip Blasia 32	-29	215	X	
	Agip OSO 32	-27	210	X	
	Agip OTE 32 GT	-15	220		
ExxonMobil	Mobil DTE 10 Excel 32	-54	250	X	
	Mobil DTE 24	-27	220	X	
	Mobil DTE Oil Light	-18	218	X	
	Mobilfluid 125	-30	225	X	
Fabrika Maziva (FAM)	Hidofluid 125	-27	207	X	X
Fuchs Europe	Renofluid TF 1500	-24	224	X	
	Renolin Eterna 32	-18	220	X	
	Renolin ZAF 32 B	-30	215	X	
Fuchs Lubricants PTE Limited	Titan RR TF	-25	210	X	
Gulf Oil Corp. Ltd.	Crest EP 32	-24	212	X	
	Harmony AW 32	-24	202	X	
Hindustan Petroleum Corp.	Enklo HLP 32	-18	180	X	
Idemitsu Oil	Daphne Super Hydraulic Fluid 32	-35	216		
INA Maziva	INA Fluid V 32	-27	230		
Indian Oil Corp. Ltd.	Servo Torque 10	-34	213	X	
	Servosystem 32	-6	190		
	Servosystem HLP 32	-21	200	X	
Klüber	Lamora HLP 32 (New Generation)	-18	210	X	
Kuwait National Lubricant Oil Company (KNLOC)	Hydraulic Oil 32	-30	210	X	
	Q8 Haydn 32	-30	208	X	
	Q8 Holst 32	-18	208	X	X
	Q8 van Gogh EP 32	-12	208	X	

Producer	Designation	Pour point in °C	Flash point in °C	Ignition point > 250°C	FE8 fulfilled
Lotos Oil	Corvus 32	-30	225		
Lukoil LLK International	Geyser ST 32	-30	218	X	
Maziva Zagreb d.o.o.	INA Fluid V 32	-36	230	X	
MOL Hungarian Oil	Hydro HM 32 hydraulic oil	-18	190		
Morris Lubricants	Liquimatic No. 4	-35	220	X	
OEST	Hydraulic Oil H-LP 32	-27	210	X	
	Turbo Hyd 32 S	-30	210	X	X
OMV	fluid VWG 32	-36	225	X	
	hyd HLP 32	-30	220	X	
	power turb 32	-15	218	X	
Orlen Oil	Hydrol L-HM / HLP 32	-34	215	X	
	Transol V 32	-36	218	X	X
Paramo / Mogul	HM 32	-40	195	X	
	OT-HP 3	-30	205	X	
Petrobras	Lubrax Hydra XP 32	-21	232		
	Lubrax Industial EGF 32 PS	-12	222		
	Lubrax Turbina EP 32	-21	234		
Petro-Canada	Environ AW 32	-42	233	X	
	Hydrex AW 32	-39	217	X	
	Turboflo EP 32	-33	220	X	
Petrol Ofisi	Hydro Oil HD 32	-27	238	X	
Petronas	Hidraulik EP 32	-9	222	X	
	Jenteram HC 32	-12	214	X	
	Jenteram HC Extra 32	-12	218	X	
Phillips 66	Diamond Class AW Turbine Oil 32	-40	227	X	X
	Powerflow AW Hydraulic Oil 32	-37	216	X	X
Prista Oil	Prista MHP 32	-30	218	X	
PTT Public Company Limited	Votera 32	-25	210	X	
Repsol	Telex E 32	-24	218	X	
Shell	Tellus Oil S2 MX 32 (old designation: Tellus Oil S2 M 32)	-30	220	X	
	Tellus Oil S3 M 32	-30	207	X	
	Turbo Oil CC 32	-12	222	X	
	Turbo Oil S4 GX 32	-33	230	X	X
Sinopec	Greatwall L-HM 32	-21	222	X	
	Greatwall L-TSA 32	-13	226	X	
SK Lubricants	ZIC Supervis AW 32	-40	230		
SRS	Wiolan HF 32	-27	200	X	
	Wiolan HF 32 DB	-27	200	X	
	Wiolan HX 32	-27	210	X	

Producer	Designation	Pour point in °C	Flash point in °C	Ignition point > 250°C	FE8 fulfilled
Statoil	HydraWay HMA 32	-27	218	X	
	TurbWay GT 32	-30	239		
Tide Water Oil Co. (India) Limited	Veedol Avalon HLP 32	-21	212		
TNK Oil	Turbo 32	-17	207		
Total	Azolla AF 32	-27	227	X	
	Azolla ZS 32	-27	210	X	
Valvoline Cummins Ltd.	Valvoline HLP 32	-18	220		
Wisura	Kineta 32 V	-24	224	X	

3.5 Proposed operating fluids for low temperature application PAO VG 32 (S…)

Producer	Designation	Pour point in °C	Flash point in °C	Ignition point > 250°C	FE8 fulfilled
BASF SE	ProEco HE 801-32	-48	200	X	
Castrol	Aircol SR 32	-50	238	X	
	Alphasyn T 32	-54	210	X	
	Perfecto SN 32	-54	264	X	
ENI	Agip Dicrea SX 32	-60	248		
ExxonMobil	Mobil SHC 524	-54	234	X	
	Mobil SHC 824	-54	248	X	
Fuchs Europe	Renolin Unisyn OL 32	-60	240		X
Klüber	Summit HySyn FG 32	-50	230	X	
Kuwait Petroleum International Lubricants (Q8 Oils)	Q8 Schumann 32	-54	224	X	
Lubrication Engineers Inc	LE 9032 Monolec	-54	240		
Phillips 66	Syncon AW Hydraulic Fluid 32	-60	240		X
Royal Purple	Synfilm GT 32	-62	249	X	
Shell	Tellus Oil S4 ME 32	-54	230	X	X
Statoil	Mereta 32	-60	235		X
Total	Dacnis SH 32	-57	250	X	
Wunsch	Syntholube compressor oil 32	-54	224	X	

3.6 Proposed operating fluids VG 46 (S...)

Producer	Designation	Pour point in °C	Flash point in °C	Ignition point > 250°C	FE8 fulfilled
Addinol Lube Oil GmbH	Hydraulic oil HLP 46 AF	-27	240	X	X
	Turbine oil TP 46	-15	230	X	
Adnoc (Abu Dhabi National Oil Company)	Hydraulic Oil H 46	-34	228		
Caltex	Regal EP 46	-21	234		
Castrol	Hyspin XP 46	-27	215	X	X
	Hyspin ZZ 46	-30	225	X	X
	Perfecto XEP 46	-15	234	X	
Cepsa	HD Turbinas 46	-12	220	X	
	Transmisiones EP 225	-30	232	X	
Chevron-Texaco	Texaco Rando HD 46	-30	204		
	Texaco Regal Premium EP 46	-15	235	X	
ExxonMobil	Mobil DTE 10 Excel 46	-45	232	X	
	Mobil DTE 846	-30	244	X	
	Mobil DTE Excel 46	-33	226	X	
Fuchs Europe	Renolin Eterna 46	-15	220	X	
Gulf Oil Corp. Ltd.	Crest EP 46	-21	220	X	
	Harmony AW 46	-24	210	X	
Idemitsu Oil	Daphne Super Hydraulic Fluid 46	-32	230		
JOMO	Hydlux A 46	-35	224		
Kuwait National Lubricant Oil Company (KNLOC)	Hydraulic Oil 46	-30	215	X	
	Q8 Haydn 46	-30	222	X	
	Q8 Holst 46	-18	222	X	X
	Q8 Hydraulic S-46	-30	222	X	
	Q8 van Gogh EP 46	-12	222	X	
Lotos Oil	Corvus 46	-27	30		
	Remiz TG 46	-18	228		
Lukoil LLK International	Geyser ST 46	-27	232	X	
Neste Oil	Neste Paine 46 ZFX	-27	220	X	
OMV	hyd HLP-AL 46	-27	232	X	
	turb HTU 46	-15	216	X	
	power turb 46	-15	254	X	
Paramo / Mogul	HM 46	-15	185	X	
Petrobras	Lubrax Turbina EP 46	-21	238	X	
Petro-Canada	Environ AW 46	-33	239	X	
	Hydrex AW 46	-33	227	X	
	Turboflo EP 46	-30	237	X	
Petronas	Jenteram HC 46	-9	218	X	
	Jenteram HC Extra 46	-9	218	X	

Producer	Designation	Pour point in °C	Flash point in °C	Ignition point > 250°C	FE8 fulfilled
Phillips 66	Diamond Class AW Turbine Oil 46	-36	231	X	X
	Powerflow AW Hydraulic Oil 46	-34	221	X	X
PTT Public Company Limited	Terbin EP 46	-15	224	X	
Repsol	Hidróleo 46	-40	200	X	
Shell	Tellus Oil S3 M 46	-30	222	X	X
	Turbo Oil CC 46	-12	238	X	
	Turbo Oil S4 GX 46	-21	245	X	X
Sinopec	Greatwall Ashless L-HM 46	-12	224	X	
	Greatwall L-HM 46	-12	224	X	
	Greatwall L-TSA 46	-13	221	X	
	Greatwall L-TSE EP 46	-15	230	X	
TNK Oil	Turbo 46	-18	215		
Total	Azolla AF 46	-27	238	X	
	Preslia 46	-9	230	X	

3.7 Proposed operating fluids for low temperature application PAO VG 46 (S…)

Producer	Designation	Pour point in °C	Flash point in °C	Ignition point > 250°C	FE8 fulfilled
BASF SE	ProEco HE 801-46	-45	280	X	
Castrol	Alphasyn T 46	-57	220	X	
Chevron-Texaco	Cetus PAO 46	-57	250	X	
Fuchs Europe	Renolin Unisyn OL 46	-60	260	X	X
Klüber	Summit HySyn FG 46	-45	240	X	
Kuwait Petroleum International Lubricants (Q8 Oils)	Q8 Schumann 46	-54	238	X	
Lubrication Engineers Inc	LE 9046 Monolec	-51	248	X	
Royal Purple	Synfilm GT 46	-60	262	X	
Shell	Tellus Oil S4 ME 46	-51	250	X	X
Statoil	Mereta 46	-60	252	X	X

3.8 Proposed operating fluids VG 100 (S...)

Producer	Designation	Pour point in °C	Flash point in °C	Ignition point > 250°C	FE8 fulfilled
Caltex	Regal EP 100	-18	255	**X**	
Castrol	Perfecto T 100	-12	215		
Chevron-Texaco	Texaco Ragal EP 100	-18	255	**X**	
ENI	Agip OTE 100	-8	250	**X**	
ExxonMobil	Mobil DTE Oil Heavy	-15	237		
	Teresstic T 100	27	242		
Kuwait National Lubricant Oil Company (KNLOC)	Q8 van Gogh 100	-12	254	**X**	
Petro-Canada	Hydrex AW 100	-30	250	**X**	
Shell	Turbo Oil T 100	-9	250	**X**	
Total	Azolla AF 100	-21	263	**X**	
	Preslia 100	-9	250	**X**	
Wunsch	Hydraulic oil HLP 100	-27	254	**X**	

4 Operating Fluids for Use in Food Industry (T... / TP...)

Producer	Designation	Pour point in °C	Flash point in °C	Ignition point > 250°C	FE8 fulfilled
Klüber	Summit HySyn FG 32	-45	>230		

Notice
USDA H1-Registration, satisfies the FDS requirements

5 High-flash Point Fluids - HFD-U (T...)

Producer	Designation	Pour point in °C	Flash point in °C	Ignition point > 250°C	FE8 fulfilled
VOITH	HI-Fluid	-33	305	X	
Fuchs	Renosafe DU 46	-33	305	X	
	Renosafe FireProtect 46	-42	270	X	X

Notice

These high-flash point fluids of viscosity class ISO VG 46 contain neither chlorinated hydrocarbons nor phosphorus acid ester. The density of the fluids is lower than the density of water.

6 Quickly Biodegradable Fluids - HEES (T...)

Producer	Designation	Pour point in °C	Flash point in °C	Ignition point > 250°C	FE8 fulfilled
Fuchs	Plantosyn 3268	-36	230		

Notice

Fuchs Plantosyn 3268 is a quickly biodegradable fluid of viscosity class ISO VG 46 corresponding to VDMA 24568.
The water risk class is 1 and the density of this fluid is lower than the density of water.

7 Requirements to be fulfilled by the Operating Fluid 'Water'

Use of water is only possible in couplings suitable for this operating medium due to a corresponding sealing and corrosion protection (e.g. TW… / TPW… / SVTW…).

8 Criteria and Information for Evaluation of used Oils

8.1 General

Mineral oils change with advanced operating time under the influence of atmospheric oxygen, temperature and impurities with catalytic effect. Additives applied are used up. This finally results in the fact that the mineral oil does no longer meet the requirements. Information enabling such an evaluation is based, above all, on the comparison of results of used oil analysis with the relevant data of the fresh oil. Considering the variety of the oils, it is not advisable to define fixed limit values for individual characteristics. Only the interpretation of all combined characteristic values can provide a verifying statement as to the fitness for continued use of the operating fluid.

Notice
The decision regarding the suitability of the operating oil for continued use thus remains reserved to the respective oil producer / oil supplier.

8.2 Sampling

Used oils should be checked for continued usability (trend analysis) in regular intervals (see instruction manual). Correct and careful sampling is of utmost importance for the informative value of analysis results. Preferably, samples should be taken during operation or immediately upon standstill of the unit from an area with oil in motion. It is important here to observe that a certain flow quantity is drained before filling the sample container.

Notice
The sample quantity depends on the scope of inspection.
For a standard scope as per Chapter 8.3 a sample quantity of 0.5 liters is required.

8.3 Scope of analysis

The scope of the analysis depends on the condition of the unit and possible problems. The following scope may be selected for a standard analysis to evaluate the condition of the oil and the unit:

- Additives:
  Calcium, magnesium, zinc, phosphorous, barium, boron

- Contaminants:
  Silicone, potassium, sodium, water as per Karl Fischer in ppm (or %)

- Condition of oil:
  Viscosity at 40° and 100°C, viscosity index, oxidation,
  appearance, neutralization number

- Wearing metals:
  Iron, chromium, tin, aluminum, nickel, copper, lead, molypdenum, PQ index

- Particle counting as per ISO 4406 / SAE 4059

- Air release property (LAV) as per DIN ISO 9120 I ASTM D 3427

8.4 Criteria / information for the evaluation of used oils

The following list contains aspects to be considered and rough standard limits for evaluating the suitability of operating oils for continued use from Voith Turbo's point of view. These data can only be considered as reference values as they depend on the different operating conditions and also on the composition and type of oil.

8.4.1 Additives

Increasing aging of the oil may reduce the value of the failure load stage.
Apart from visual inspections of the components (see instruction manual), the oil producer/supplier should issue a statement about the residual content of additives by using the infrared spectrum. A residual content of EP additives of more than 30% normally guarantees that the reduction of the FZG load stage is not more than one stage. A lower residual content of EP additives indicates that the oil needs to be changed.

8.4.2 Oil condition

A visual / sensory test (severe blackening, settling of residues (formation of sludge) and precipitation and / or sharp or burning smell) and the results of the oil analysis indicate that the oil needs to be changed.

A change in viscosity of > ± 10 % compared to the fresh oil is also an indication for a necessary oil change.

Notice
It is necessary to find the cause for the change in viscosity!

8.4.3 Neutralization number NZ (DIN 51558)

The increase of the neutralization number is not a general criterion for the aging of oil.

However, it is recommended changing the oil at the following increase of the neutralization number compared to the one of fresh oil:

- for turbine oils: 0.5 - 1.0 mg KOH / g
- for HLP oils: 1.0 - 1.5 mg KOH / g
- for CLP oils: 1.5 - 2.0 mg KOH / g

8.4.4 Water content (DIN ISO 3733)

If the water content exceeds 0.05 weight-percent (500 ppm), measures to remove the water have to be taken.
Procedure: Centrifuging, filtering using a coalescer (multi-phase separator), vacuum treatment, settling (by letting the oil rest for 1 to 2 days) and draining through a drain cock or by heating up.
At a water content of ≥ 0.2 weight-% (already visible as cloudiness of the oil) the oil needs to be changed.

Oils with verified water release property are capable of emulsifying up to approx. 0.2 % water without any negative effect on the function.

Notice
Find the cause for water content!

8.4.5 Air release property LAV (DIN ISO 9120)

Air release property of new oil ≤ 5 minutes (0.2 % at 50 °C).
It is necessary to change the oil in case of pressure and speed variations, if other causes, as e.g. too low oil level, can be excluded.
We recommend determining the air release property value.

Work Sheet amd 682.0

Arrangement of fusible plugs (FP)

T… / DT…

VTCs of type T, TW and DT and Ex-protection as per Directive 2014/34/EU

Number and arrangement of fusible plugs (FP), blind screws, and switching elements for outer wheel drive (inner wheel drive) for the standard design.

General:

- From VTC size 366, a sight glass is installed
- For VTC size 650, the outer wheel for M24 is to be used for Ex-protection.
- The BTM is not approved for explosive atmospheres
- A deviating arrangement, in consideration of the thermal behavior, is only permitted upon consultation with Voith (with the exception of the next item)
- Deviating arrangement is not permitted for
  - blocking driven machines with inner wheel drive
  - a position from which the operating medium sprays in brake drum direction

	Outer wheel - no Ex			Outer wheel - Ex			Optional	Remark
VTC size	**FP**	**Blind screw**	**Sight glass**	**FP**	**Blind screw**	**Sight glass**	**MTS-BTS-BTM- Switching element[1)]** [2)]	
154	1 (2)	- (1)	-	1 (2)	- (1)	-	-	With blocking driven machine and inner wheel drive, radial arrangement of FP required. *For radial arrangement of the FPs: 2 additional bores in the outer wheel
154 DT [4)]	2	- (2)	-	2	- (2)	-	-	
206	1 (2)	- (1)	-	1 (2)	- (1)	-	1[3)]	
206 DT [4)]	2	- (2)	-	2	- (2)	-	1[3)]	
274	1 (2)	- (1)	-	1 (2)	- (1)	-	1[3)]	
274 DT [4)]	2	- (2)	-	2	- (2)	-	1[3)]	
366	1	4	1	2	3	1	1	
366 TW	2	3	1	4	1	1	1	
422	2	5	1	4	3	1	1	
487	2	5	1	4	3	1	1	
562	2	5	1	4	3	1	1	
650	3	2	1	3**	2	1	1	**OW-M24
750	2	3	1	4	1	1	1	
866	3	2	1	4	1	1	1	
866 DT [4)]	6	5	1	10	1	1	1	
1000	3	-	1	3	-	1	1	
1000 DT [4)]	6	1	1	6	1	1	1	
1150	3	2	1	4	1	1	1	
1150 DT [4)]	6	5	1	10	1	1	1	

1) Optional: The MTS, BTS or BTM switching element is inserted instead of a blind screw.
The BTM switching element may only be inserted in the outer wheel.
2) The blind screw opposite the BTM has to be replaced by the counterweight.
3) Only possible with rework in case of radial arrangement of the FP in the outer wheel.
4) For VTCs with 2 outer wheels (DT), the number of FPs is evenly distributed to both outer wheels.

VOITH

Voith Turbo
Division Industry

Work Sheet ait394.9

List of Voith - Representatives

West-Europe:

Germany (VTCR):
Voith Turbo GmbH & Co. KG
Industry
Voithstr. 1
74564 CRAILSHEIM
GERMANY
Phone: +49-7951 32-0
Fax: +49-7951 32-480
e-mail: startup.components@voith.com
www.voithturbo.com/fluid-couplings

Service:
Phone: +49 7951 32-1020
Fax: +49 7951 32-554
e-mail: vtcr-ait.service@voith.com

Emergency Hotline (24/7):
Phone: +49 7951 32-599

Austria:
Indukont Antriebstechnik GmbH
Badenerstraße 40
2514 TRAISKIRCHEN
AUSTRIA
Phone: +43-2252-81118-22
Fax: +43-2252-81118-99
e-mail: info@indukont.at

Belgium (VTBV):
Voith Turbo S. A. / N. V.
Square Louisa 36
1150 BRÜSSEL
BELGIUM
Phone: +32-2-7626100
Fax: +32-2-7626159
e-mail: voithturbo.be@voith.com

Denmark (VTDK):
Voith Turbo A/S
Egegårdsvej 5
4621 GADSTRUP
DENMARK
Phone: +45-46 141550
Fax: +45-46 141551
e-mail: postmaster@voith.dk

Faroe Islands:
see Denmark (VTDK)

Finland (Masino):
Masino Oy
Kärkikuja 3
01740 VANTAA
FINLAND
Phone: +358-10-8345 500
Fax: +358-10-8345 501
e-mail: sales@masino.fi

France (VTFV):
Voith Turbo S. A. S.
21 Boulevard du Champy-Richardets
93166 NOISY-LE-GRAND CEDEX
FRANCE
Phone: +33-1-4815 6900
Fax: +33-1-4815 6901
e-mail: voithfrance@voith.com

Great Britain (VTGB):
Voith Turbo Limited
6, Beddington Farm Road
CRO 4XB CROYDON, SURREY
GREAT BRITAIN
Phone: +44-20-8667 0333
Fax: +44-20-8667 0403
e-mail: Turbo.UK@voith.com

Emergency Hotline (24/7):
Phone: +44-20-8667 0333

Greece:
see Germany (VTCR)

Greenland:
see Denmark (VTDK)

Ireland:
see Great Britain (VTGB)

Italy (VTIV):
Voith Turbo s.r.l.
Via G. Lambrakis 2
42122 REGGIO EMILIA
ITALY
Phone: +39-05-2235-6711
Fax: +39-05-2235-6790
e-mail: info.voithturbo@voith.com

Liechtenstein:
see Germany (VTCR)

Luxembourg:
see Belgium (VTBV)

Netherlands (VTNT):
Voith Turbo B.V.
Koppelstraat 3
7391 AK TWELLO
THE NETHERLANDS
Phone: +31-571-2796-00
Fax: +31-571-2764-45
e-mail: voithnederland@voith.com

Norway (VTNO):
Voith Turbo AS
Lahaugmoveien 30A
2013 SKJETTEN
NORWAY
Phone: +47 6384 7020
Fax: +47 6384 7021
e-mail: info.turbo.norway@voith.com

Portugal:
see Spain (VTEV)

Spain (VTEV) :
Voith Turbo S. A.
Avenida de Suiza 3
P.A.L. Coslada
28820 COSLADA (MADRID)
SPAIN
Phone: +34-91-6707800
Fax: +34-91-6707840
e-mail: info.voithturbospain@voith.com

Sweden (VTSN):
Voith Turbo AB
Finspångsgatan 46
16353 SPÅNGA-STOCKHOLM
SWEDEN
Phone: +46-8-564-755-50
Fax: +46-8-564-755-60
e-mail: voithturbo.sweden@voith.com

Switzerland:
see Germany (VTCR)

VOITH

Voith Turbo
Division Industry

Work Sheet ait394.9

List of Voith - Representatives

East-Europe:

Albania:
see Hungary (VTHU)

Bosnia Herzegowina:
see Hungary (VTHU)

Bulgaria:
see Hungary (VTHU)

Croatia:
see Hungary (VTHU)

Czech Republic (VTCZ):
Voith Turbo s.r.o.
Hviezdoslavova 1a
62700 BRNO
CZECH REPUBLIC
Phone: +420-548-226070
Fax: +420-548-226051
e-mail: info@voith.cz

Estonia:
see Poland (VTPL)

Hungary (VTHU):
Voith Turbo Kft.
Felvég Útca 4
2051 BIATORBÁGY
HUNGARY
Phone: +36-23-312 431
Fax: +36-23-310 441
e-mail: vthu@voith.com

Kosovo:
see Hungary (VTHU)

Latvia:
see Poland (VTPL)

Lithuania:
see Poland (VTPL)

Macedonia:
see Hungary (VTHU)

Poland (VTPL):
Voith Turbo sp.z o.o.
Majków Duży 74
97-371 WOLA KRZYSZTOPORSKA
POLAND
Phone: +48-44 646 8848
Fax: +48-44-646 8520
e-mail: voithturbo.polska@voith.com

Emergency Hotline (24/7):
Phone: +48-44 646 8519
e-mail: ecos@voith.com

Romania (VTRO):
Voith Turbo S.R.L.
Strada Barbu Vacarescu nr. 13
Etaj 3 si 4
020271 BUCHAREST
ROMANIA
Phone: +40-31-22 36202
Fax: +40-21-22 36210
e-mail: voith.romania@voith.com

Russia (VTRU):
Voith Turbo O.O.O.
Branch Office Moskau
Nikolo Yamskaya ul. 21/7, str. 3
109240 MOSKAU
RUSSIA
Phone: +7 495 915-3296 ext. 122
Fax: +7 495 915-3816
mobil Herr Bulanzev: +7 919 108 2468
e-mail: voithmoscow@Voith.com

Voith Turbo
Branch Office Novokusnetsk
(Shcherbinin, Anatoliy)
Skorosnaya ul. 41, Liter B1
654025 NOVOKUSNETSK
Kemerovskaya oblast
RUSSIA
Phone/Fax: +7 3843 311 109
mobil: +7 9132 802 110
e-mail: voith22@bk.ru

Serbia:
see Hungary (VTHU)

Slovak Republic:
see Czech Republic (VTCZ)

Slovenia:
see Hungary (VTHU)

Ukraine (VTUA):
Voith Turbo Ltd.
Degtyarivska Str. 25, building 1
04119 KIEV
UKRAINE
Phone: +380-44-581 4760
Fax: +380-44-581 4761
e-mail: Dmitriy.Kalinichenko@Voith.com

see also Poland (VTPL)

North America:

Canada (VTC):
Voith Turbo Inc.
171 Ambassador Drive, Unit 1
L5T 2J1 MISSISSAUGA, ONTARIO
CANADA
Phone: +1-905-670-3122
Fax: +1-905-670-8067
e-mail: Info@voithusa.com

Emergency Hotline (24/7):
Phone: +1-905-738-1829

Mexico (VTX):
Voith Turbo S.A. de C.V.
Alabama No.34
Col. Nápoles Delg. Benito Juarez
C.P. 03810 MÉXICO, D.F.
MÉXICO
Phone: +52-55-5340 6970
Fax: +52-55-5543 2885
e-mail: vtx-info@voith.com

U.S.A. (VTI):
Voith Turbo Inc.
25 Winship Road
YORK, PA 17406-8419
UNITED STATES
Phone: +1-717-767 3200
Fax: +1-717-767 3210
e-mail: VTI-Information@voith.com

Emergency Hotline (24/7):
Phone: +1-717-767 3200
e-mail: VTIServiceCenter@voith.com

Southern- + Middle Amerika:

Brazil (VTPA):
Voith Turbo Ltda.
Rua Friedrich von Voith 825
02995-000 JARAGUÁ, SÃO PAULO - SP
BRAZIL
Phone: +55-11-3944 4393
Fax: +55-11-3941 1447
e-mail: info.turbo-brasil@voith.com

Emergency Hotline (24/7):
Phone: +55-11-3944 4646

Colombia (VTKB):
Voith Turbo Colombia Ltda.
Calle 17 No. 69-26
Centro Empresarial Montevideo
110931 BOGOTÁ, D.C.
COLOMBIA
Tel.: +57 141-17664
Fax: +57 141-20590
e-mail: voith.colombia@voith.com

Chile (VTCI):
Voith Turbo S. A.
Av.Pdte.Eduardo Frei Montalva 6115
8550189 SANTIAGO DE CHILE (CONCHALI)
CHILE
Phone: +56-2-944-6900
Fax: +56-2-944-6950
e-mail: VoithTurboChile@voith.com

Ecuador:
see Colombia (VTKB)

Peru (VTPE):
Voith Turbo S.A.C.
Av. Argentinia 2415
LIMA 1
PERU
Phone: +51-1-6523014
e-mail: Lennart.Kley@Voith.com

see also Brazil (VTPA)

Venezuela:
see Colombia (VTKB)

VOITH

Voith Turbo
Division Industry

Work Sheet ait394.9

List of Voith - Representatives

Africa:

Algeria:
see France (VTFV)

Botswana:
see South Africa (VTZA)

Egypt:
Copam Egypt
33 El Hegaz Street, W. Heliopolis
11771 CAIRO
EGYPT
Phone:+202-22566 299
Fax: +202-22594 757
e-mail: copam@datum.com.eg

Gabon:
see France (VTFV)

Guinea:
see France (VTFV)

Ivory Coast:
see France (VTFV)

Lesotho:
see South Africa (VTZA)

Marocco (VTCA):
Voith Turbo S.A.
Rue Ibnou El Koutia, No. 30
Lot Attawfiq – Quartier Oukacha
20250 CASABLANCA
MAROCCO
Tel:. +212 522 34 04 50
Fax. +212 522 34 04 45
e-mail: info@voith.ma

Emergency Hotline (24/7):
Phone:+212 661 074 012

Mauretania:
see Spain (VTEV)

Mozambique:
see South Africa (VTZA)

Namibia:
see South Africa (VTZA)

Niger:
see France (VTFV)

Senegal:
see France (VTFV)

South Africa (VTZA):
Voith Turbo Pty. Ltd.
16 Saligna Street
Hughes Business Park
1459 WITFIELD, BOKSBURG
SOUTH AFRICA
Phone: +27-11-418-4000
Fax: +27-11-418-4080
e-mail: info.VTZA@voith.com

Emergency Hotline (24/7):
Phone: +27-11-418-4060

Swaziland:
see South Africa (VTZA)

Tunesia:
see France (VTFV)

Zambia:
see South Africa (VTZA)

Zimbabwe:
see South Africa (VTZA)

Near + Middle East:

Bahrain:
see United Arabian Emirates (VTAE)

Iran (VTIR):
Voith Turbo Iran Co., Ltd.
1st Floor, No. 215
East Dastgerdi Ave.
Modarres Highway
19198-14813 TEHRAN
IRAN
Phone: + 98-21-2292 1524
Fax: + 98-21-2292 1097
e-mail: voithturbo.iran@voith.ir

Iraq:
see United Arabian Emirates (VTAE)

Israel (VTIL):
Voith Turbo Israel Ltd.
Tzvi Bergman 17
49279 PETACH
ISRAEL
Phone: +972-3-9131 888
Fax: +972-3-9300 092
e-mail: TPT.Israel@voith.com

Jordan,
Kuwait,
Lebanon,
Oman,
Qatar,
Saudi Arabia,
Syria,
Yemen:
see United Arabian Emirates (VTAE)

Turkey (VTTR):
Voith Turbo Güç Aktarma Tekniği Ltd. Şti.
Armada İş Merkezi Eskişehir Yolu No: 6 A-Blok Kat: 13
06520 SÖĞÜTÖZÜ-ANKARA
TURKEY
Phone: +90 312 495 0044
Fax: +90 312 495 8522
e-mail: voith-turkey@voith.com

United Arabian Emirates (VTAE):
Voith Middle East FZE
P.O.Box 263461
Plot No. TP020704
Technopark, Jebel Ali
DUBAI
UNITED ARAB EMIRATES
Phone: +971-4 810 4000
Fax: +971-4 810 4090
e-mail: voith-middle-east@voith.com

Australia:

Australia (VTAU):
Voith Turbo Pty. Ltd.
Building 2,
1-47 Percival Road
2164 SMITHFIELD NSW
AUSTRALIA
Phone: +61-2-9609 9400
Fax: +61-2-9756 4677
e-mail: vtausydney@voith.com

Emergency Hotline (24/7):
Phone: +61-2-9609 9400
e-mail: vtau_spare_parts@voith.com

New Zealand (VTNZ):
Voith Turbo NZ Pty. Ltd.
295 Lincoln Rd.
Waitakere City
0654 AUCKLAND
NEW ZEALAND
Phone: +11 64 9838 1269
Fax: +11 64 9838 1273
e-mail: VTNZ@voith.com

VOITH

Voith Turbo
Division Industry

Work Sheet ait394.9

List of Voith - Representatives

South-East Asia:

Brunei:
see Singapore (VTSG)

India (VTIP):
Voith Turbo Private Limited
Transmissions and Engineering
P.O. Industrial Estate
500 076 NACHARAM-HYDERABAD
INDIA
Phone:+91-40-27173 561+592
Fax: +91-40-27171 141
e-mail: info@voithindia.com

Emergency Hotline (24/7):
Phone: +91-99-4906 0122
e-mail: vtip.service@voith.com

Indonesia:
PT Voith Turbo
Jl. T. B. Simatupang Kav. 22-26
Talavera Office Park, 28th. Fl.
12430 JAKARTA
INDONESIA
Phone:+62 21 7599 9848
Fax: +62 21 7599 9846
e-mail: vike.aryanti@voith.com

Malaysia:
see Singapore (VTSG)

Myanmar:
see Singapore (VTSG)

Philippines:
see Singapore (VTSG)

Singapore (VTSG)
Voith Turbo Pte. Ltd.
10 Jalan Lam Huat
Voith Building
737923 SINGAPORE
SINGAPORE
Phone:+65-6861 5100
Fax: +65-6861-5052
e-mail: sales.singapore@voith.com

Thailand:
see Singapore (VTSG)

Vietnam:
see Singapore (VTSG)

East Asia:

China:
see Hongkong (VTEA)

Voith Turbo Power Transmission
(Shanghai) Co., Ltd. (VTCB)
Bejing Branch
18 Floor, Tower F, Phoenix Place
5A Shuguang Xili, Chaoyang District
100028 BEIJING
P.R. CHINA
Phone:+86-10-5665 3388
Fax: +86-10-5665 3333
e-mail: VT_Industry_China@Voith.com

Voith Turbo Power Transmission
(Shanghai) Co. Ltd. (VTCN)
Representative Office Shanghai
No. 265, Hua Jin Road
Xinzhuang Industry Park
201108 SHANGHAI
CHINA
Phone:+86-21-644 286 86
Fax: +86-21-644 286 10
e-mail: VT_Industry_China@Voith.com

Service Center (VTCT):
Voith Turbo Power Transmission
(Shanghai) Co. Ltd.
Taiyuan Branch
No. 36 Workshop, TISCO,
No. 73, Gangyuan Road
030008 TAIYUAN, SHANXI
P.R. CHINA
Phone:+86 351 526 8890
Fax: +86 351 526 8891
e-mail: VT_Industry_China@Voith.com

Emergency Hotline (24/7):
Phone: +86 21 4087 688
e-mail: Hongjun.Wang@voith.com

Hongkong (VTEA):
Voith Turbo Ltd.
908, Guardforce Centre,
3 Hok Yuen Street East,
HUNGHOM, KOWLOON
HONG KONG
Phone:+85-2-2774 4083
Fax: +85-2-2362 5676
e-mail: voith@voith.com.hk

Japan (VTFC):
Voith Turbo Co., Ltd.
9F, Sumitomo Seimei Kawasaki Bldg.
11-27 Hlgashida-chou, Kawasaki-Ku,
Kawasaki-Shi,
210-0005 KANAGAWA
JAPAN
Phone:+81-44 246 0555
Fax: +81-44 246 0660
e-mail: Satoshi.Masuda@Voith.com

Korea (VTKV):
Voith Turbo Co., Ltd.
Room # 1717, Golden Tower
Officetel 191
Chungjung-Ro 2-Ka
Saedaemoon-Ku
120-722 SEOUL
SOUTH KOREA
Phone: +82-2-365 0131
Fax: +82-2-365 0130
e-mail: sun.lee@voith.com

Macau:
see Hongkong (VTEA)

Mongolia (VTA-MON):
Voith Turbo GmbH & Co. KG
2nd Floor Serkh Bogd Co. Ltd.
Office Building United Nations Street 4,
Khoroo Chingeltei District
ULAANBAATAR
MONGOLIA
Phone: +976 7010 8869
e-mail: Daniel.Bold@Voith.com

Taiwan (VTTI):
Voith Turbo Co. Ltd.
Taiwan Branch
No. 3 Taitang Road,
Xiaogang District
81246 KAOHSIUNG
TAIWAN, R.O.C.
Phone: +886-7-806 1806
Fax: +886-7-806 1515
e-mail: sue.ou@voith.com

Voith Turbo GmbH & Co. KG
Division Industry
Voithstr. 1
74564 Crailsheim, GERMANY
Tel. + 49 7951 32 599
Fax + 49 7951 32 554
vtcr-ait.service@voith.com
www.voith.com/fluid-couplings

VOITH
Inspiring Technology
for Generations