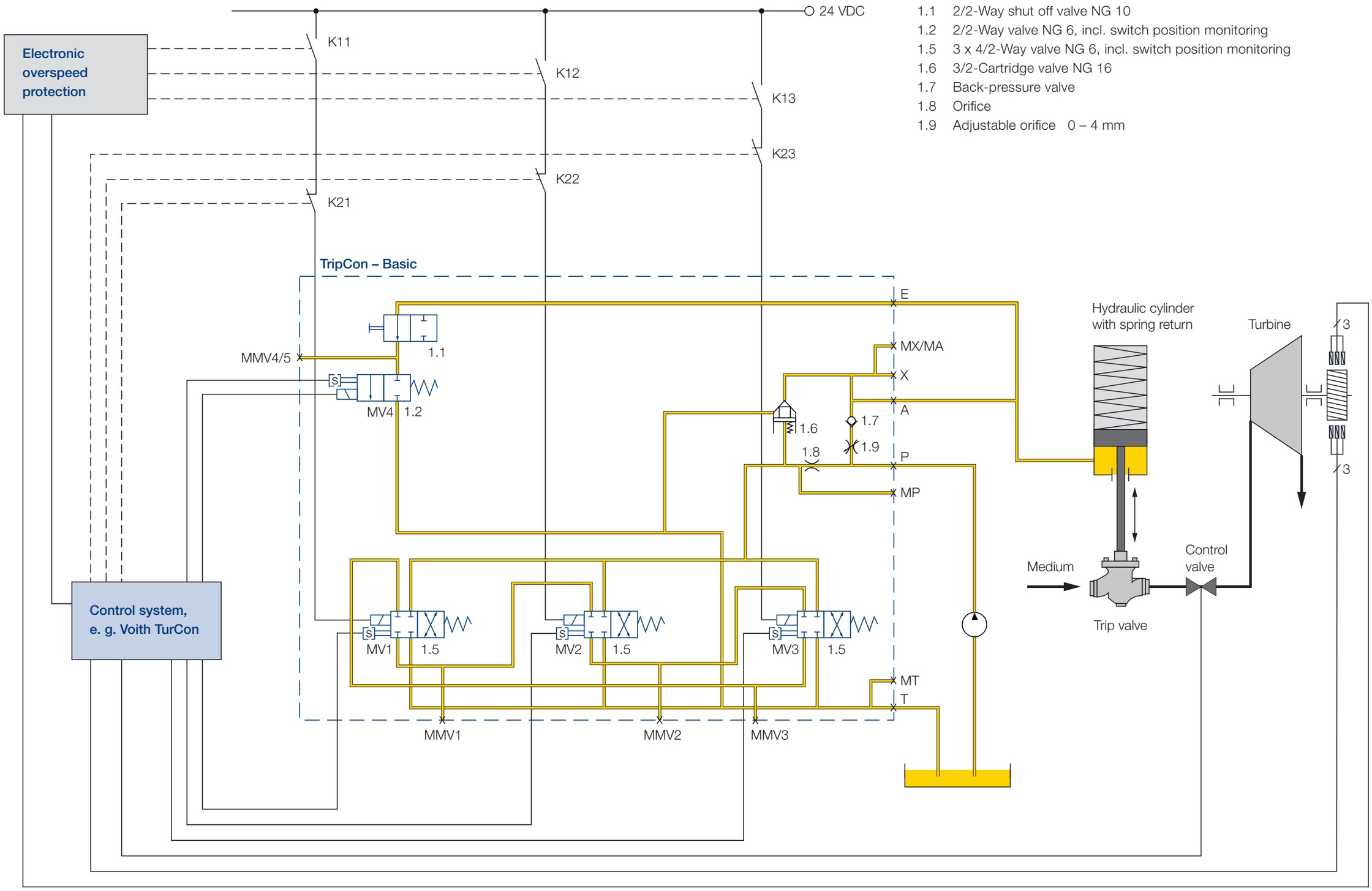

1.1 2/2-Way shut off valve NG 10
1.2 2/2-Way valve NG 6, incl. switch position monitoring
1.5 3 x 4/2-Way valve NG 6, incl. switch position monitoring
1.6 3/2-Cartridge valve NG 16
1.7 Back-pressure valve
1.8 Orifice
1.9 Adjustable orifice 0 – 4 mm